Rider Models 400
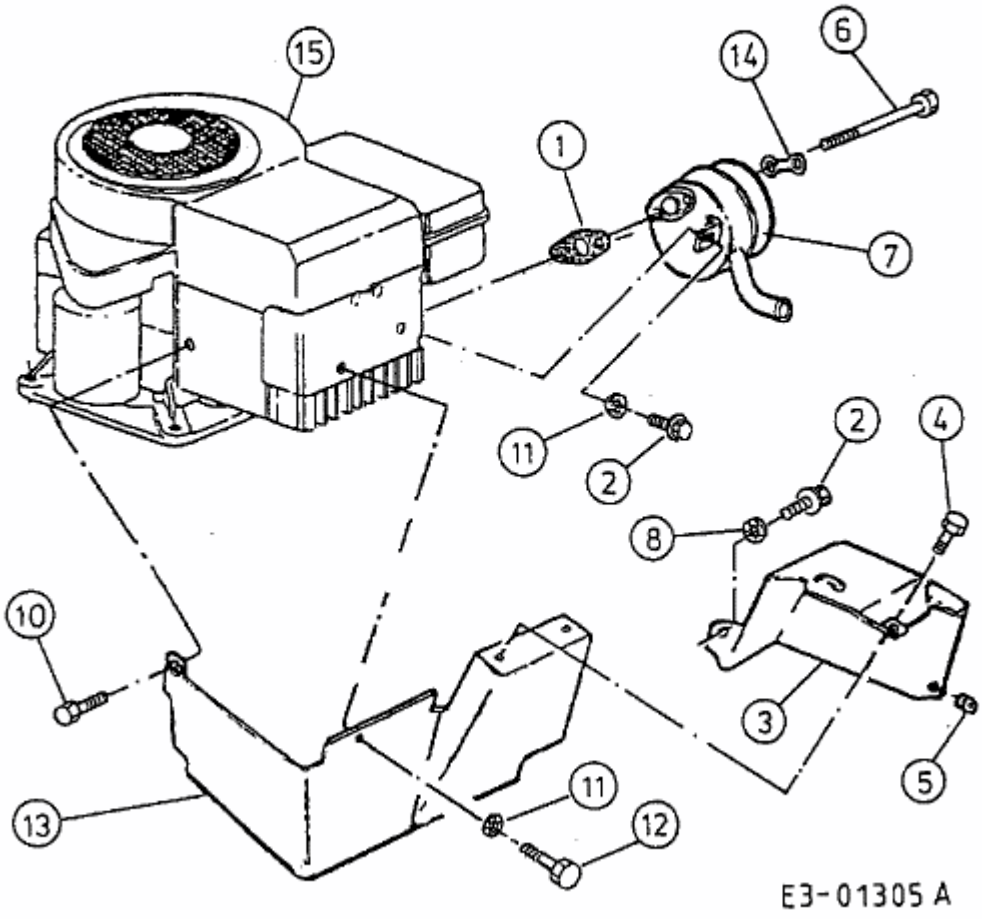
Engine B&S 28T707-1154-E1