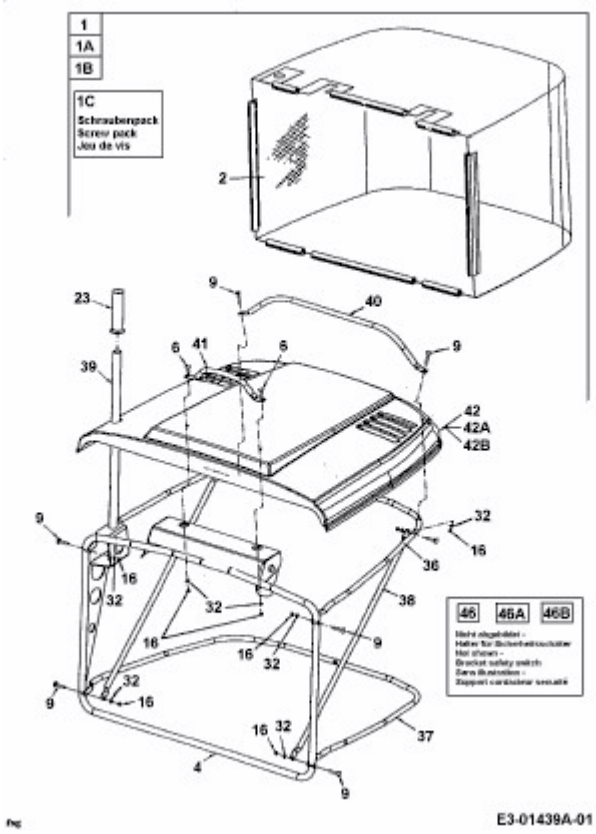AMH 1301 > 13A5459E619 (2002) > GRASFANGKORB