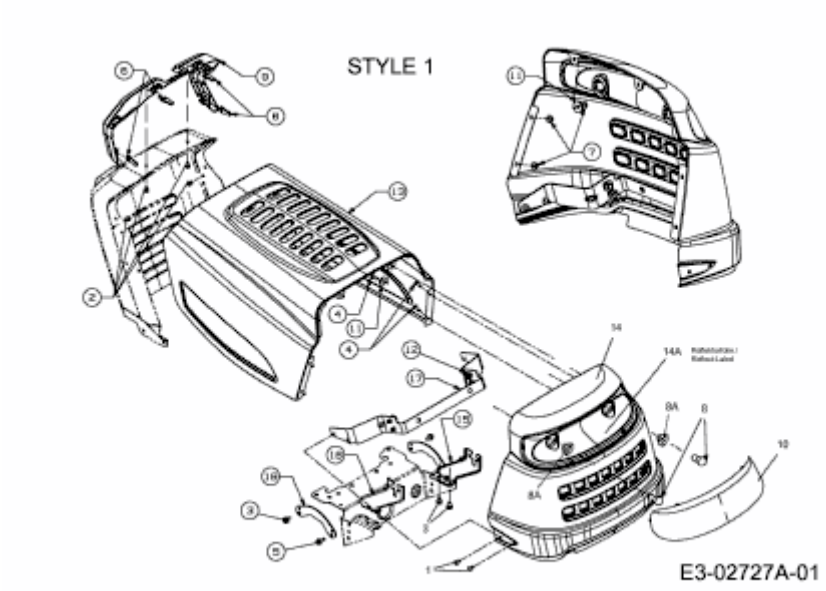RS 22/107 > 13A4761G683 (2007) > MOTORHAUBE 1-STYLE