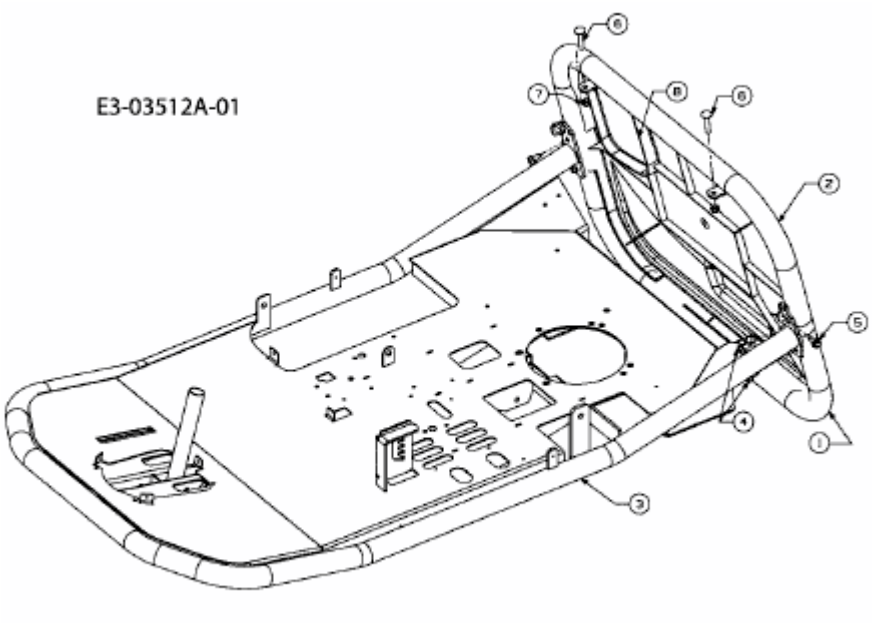13A4054-684 (2008) > RAHMEN