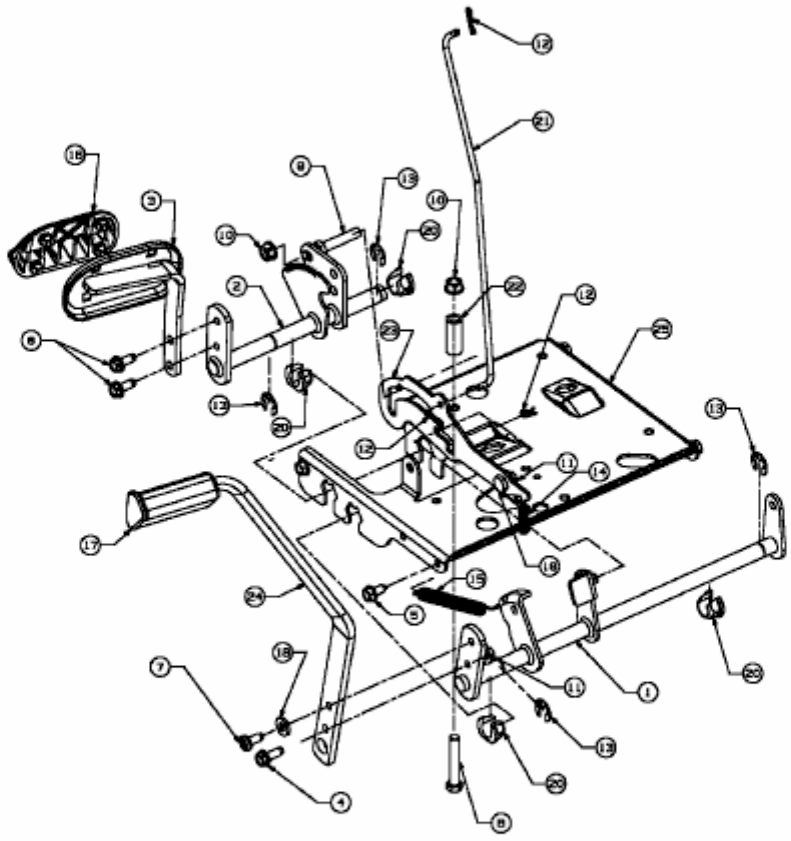RH 175/105 A > 13A3488N600 (2005) > PEDALE