BL 155/92 A > 13A3481E684 (2006) > MOTORHAUBE 1-STYLE

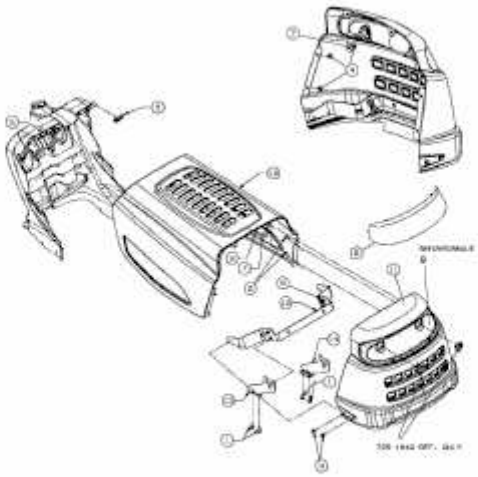

E3-02407A-01