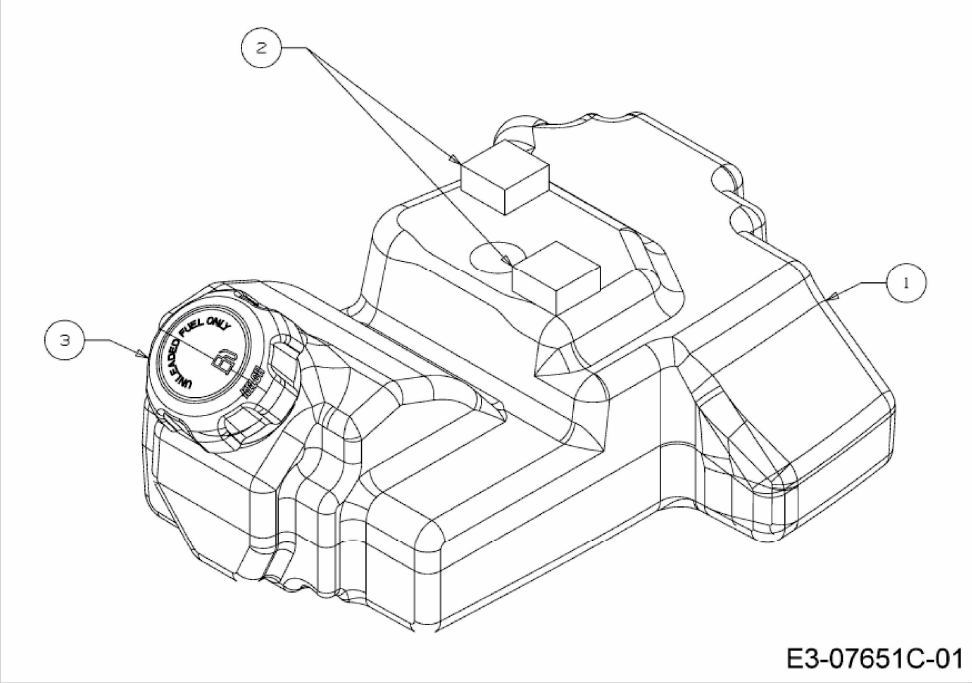
2
1
3
UNLEADED FUEL ONLY
E3-07651C-01