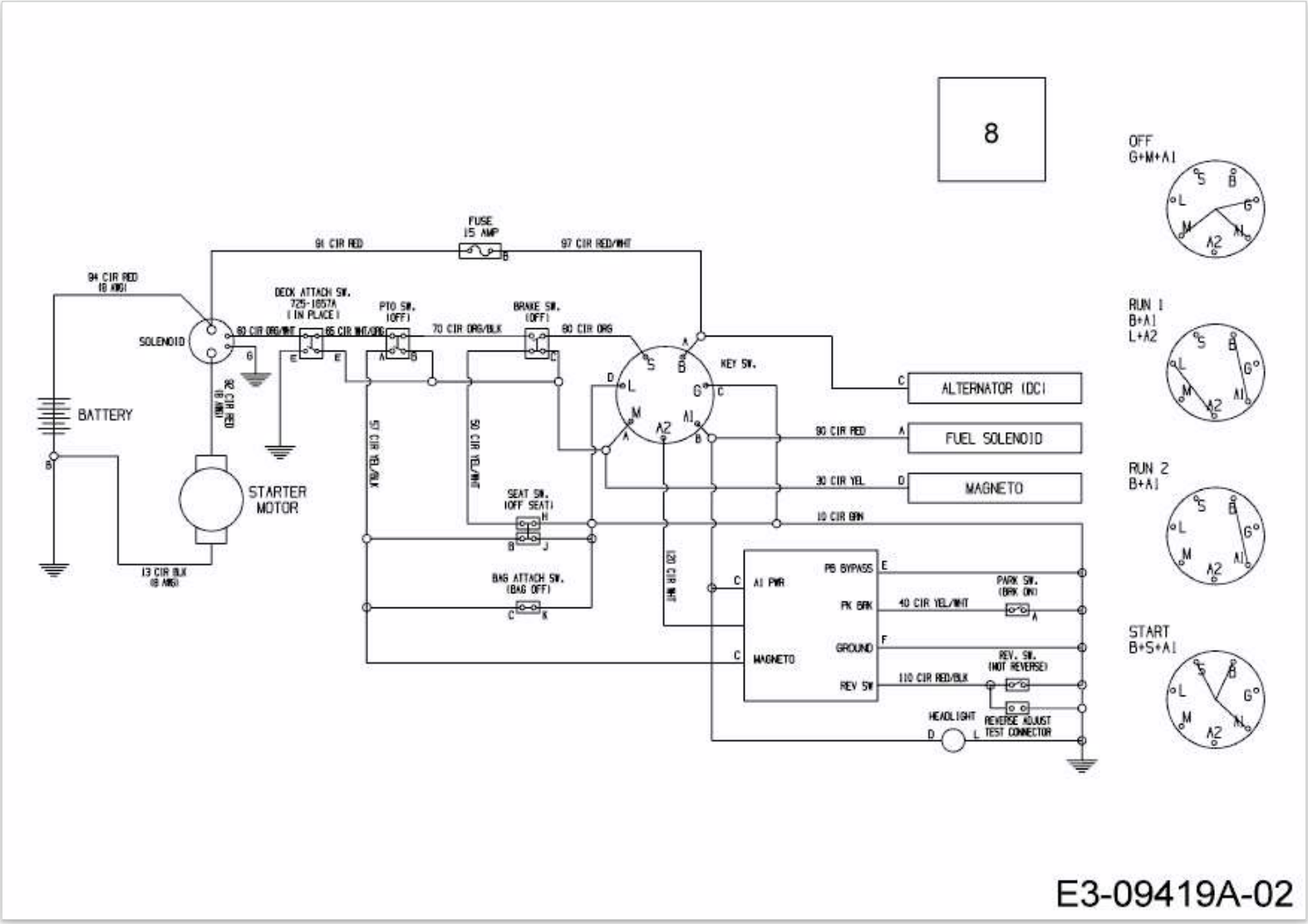SCOOTER PRO HYDRO > 13A221HD650 (2018) > SCHALTPLAN