EXPERT SCOOTER PRO HYDRO > 13A221HD650 (2017) > SCHALTPLAN

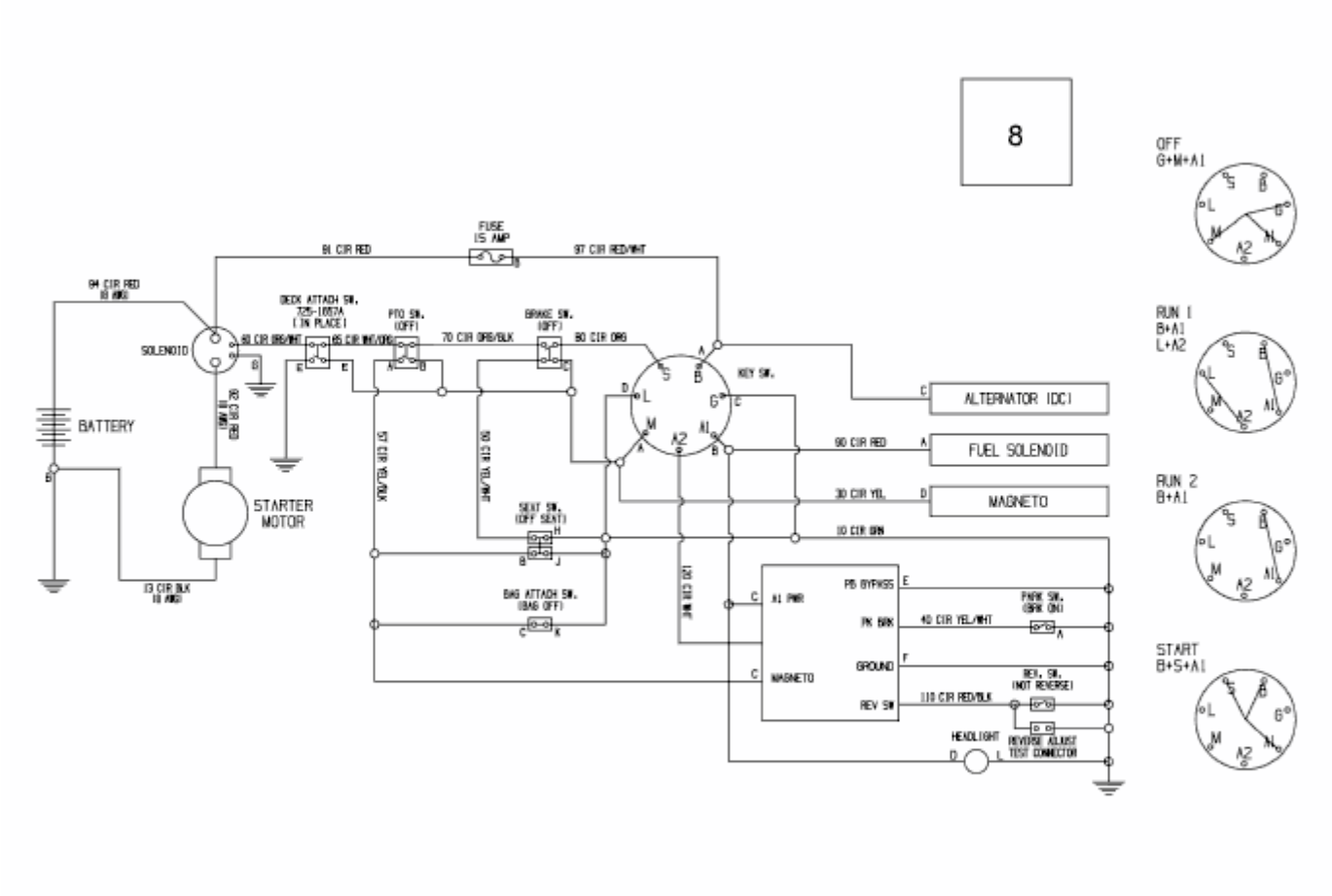

E3-09419A-02