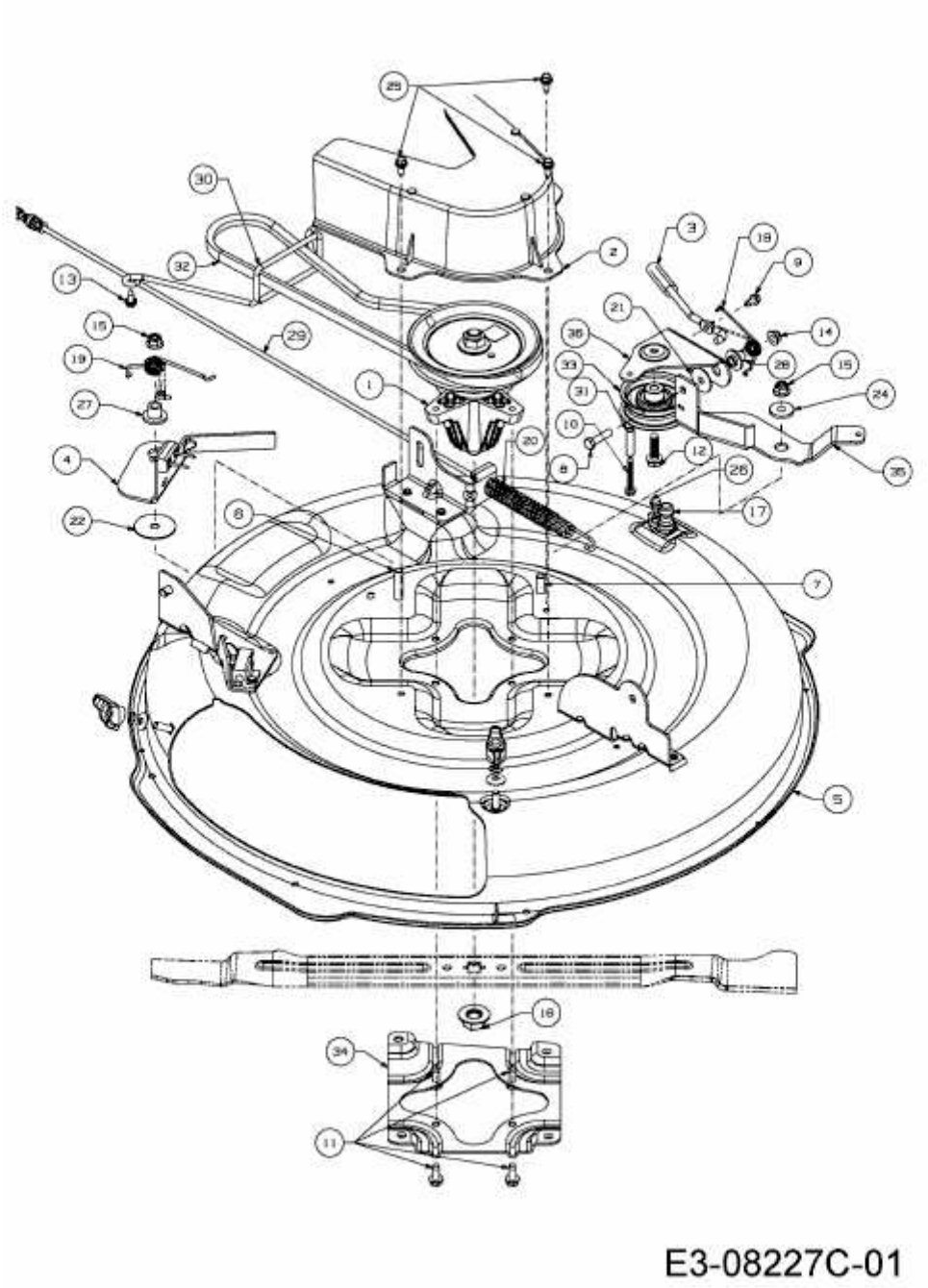EXPERT SCOOTER PRO HYDRO > 13A221HD650 (2017) > MÄHWERK D (30"/76CM)