EXPERT SCOOTER PRO HYDRO > 13A221HD650 (2016) > MESSERSPINDEL 618-04822B

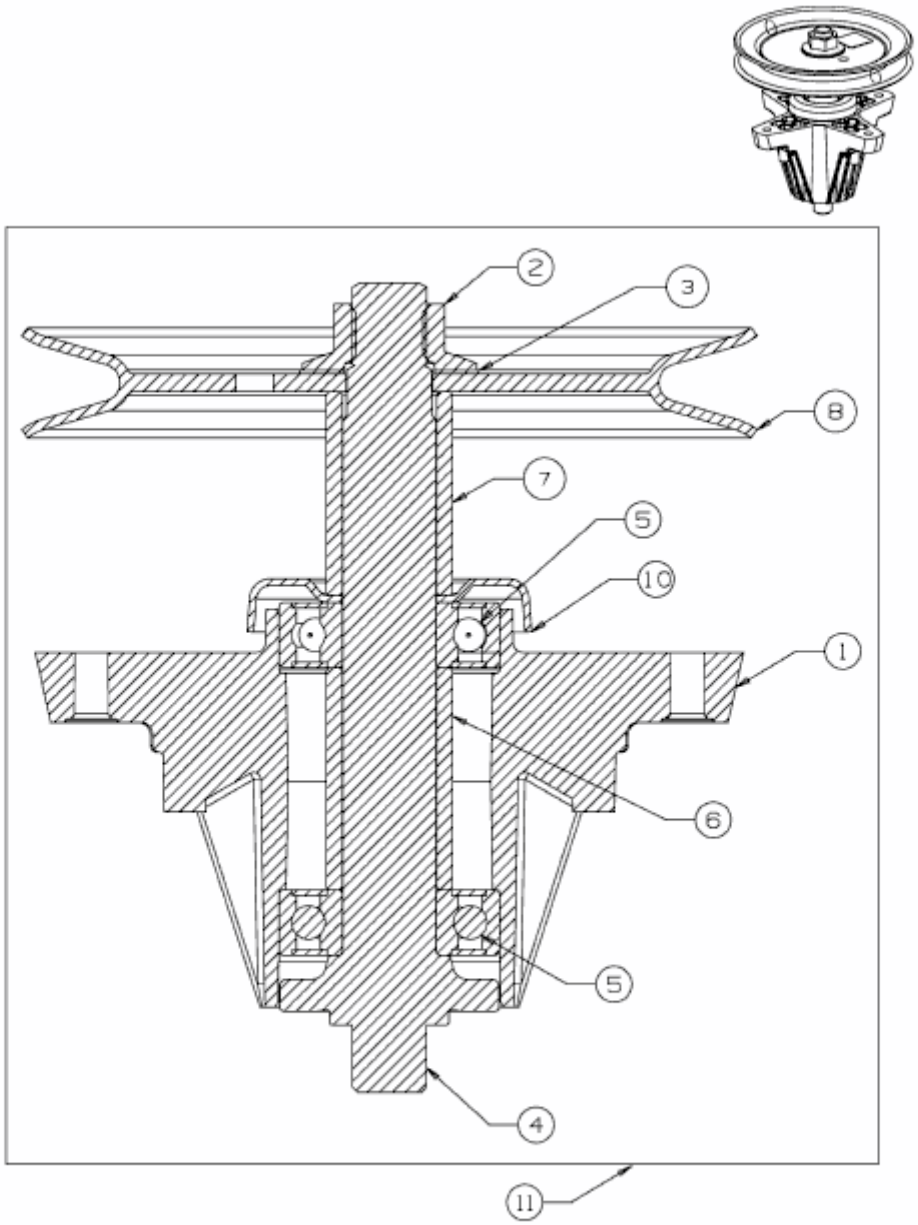

E3-07659E-01