YARD MACHINES 38 > 13A1762F329 (2013) > SCHALTPLAN

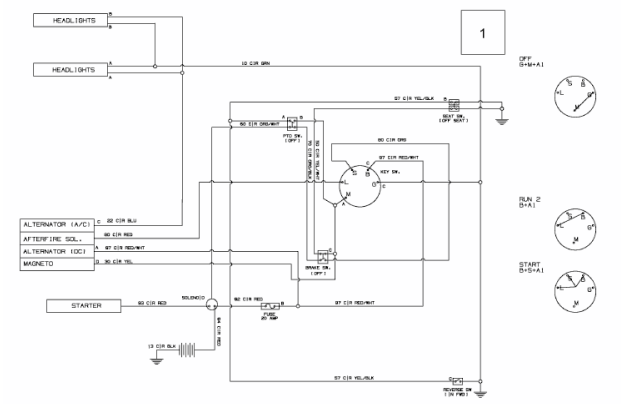

E3-08488A-02