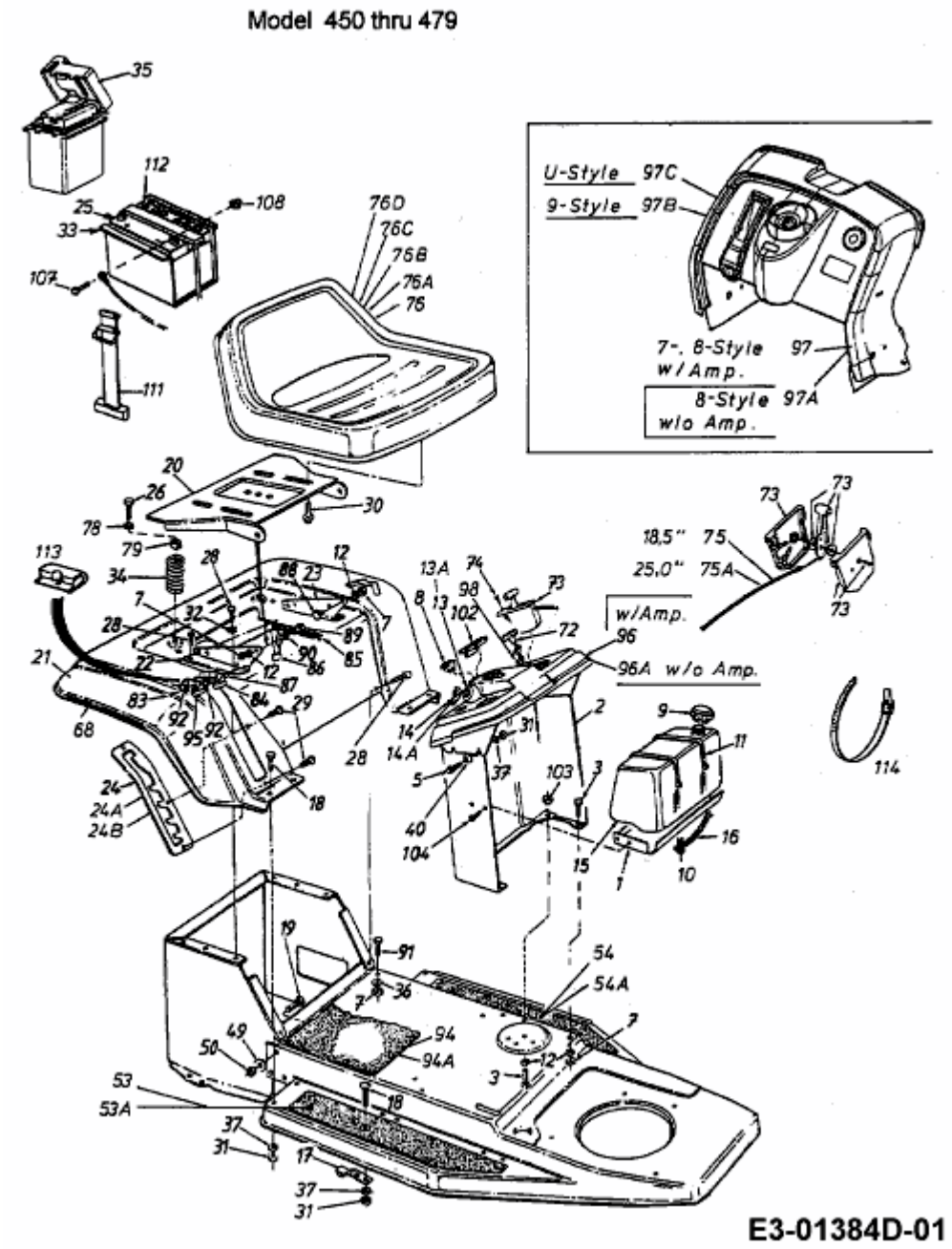13A1450F619 (2003) > ARMATURENBRETT, SITZ, TANK