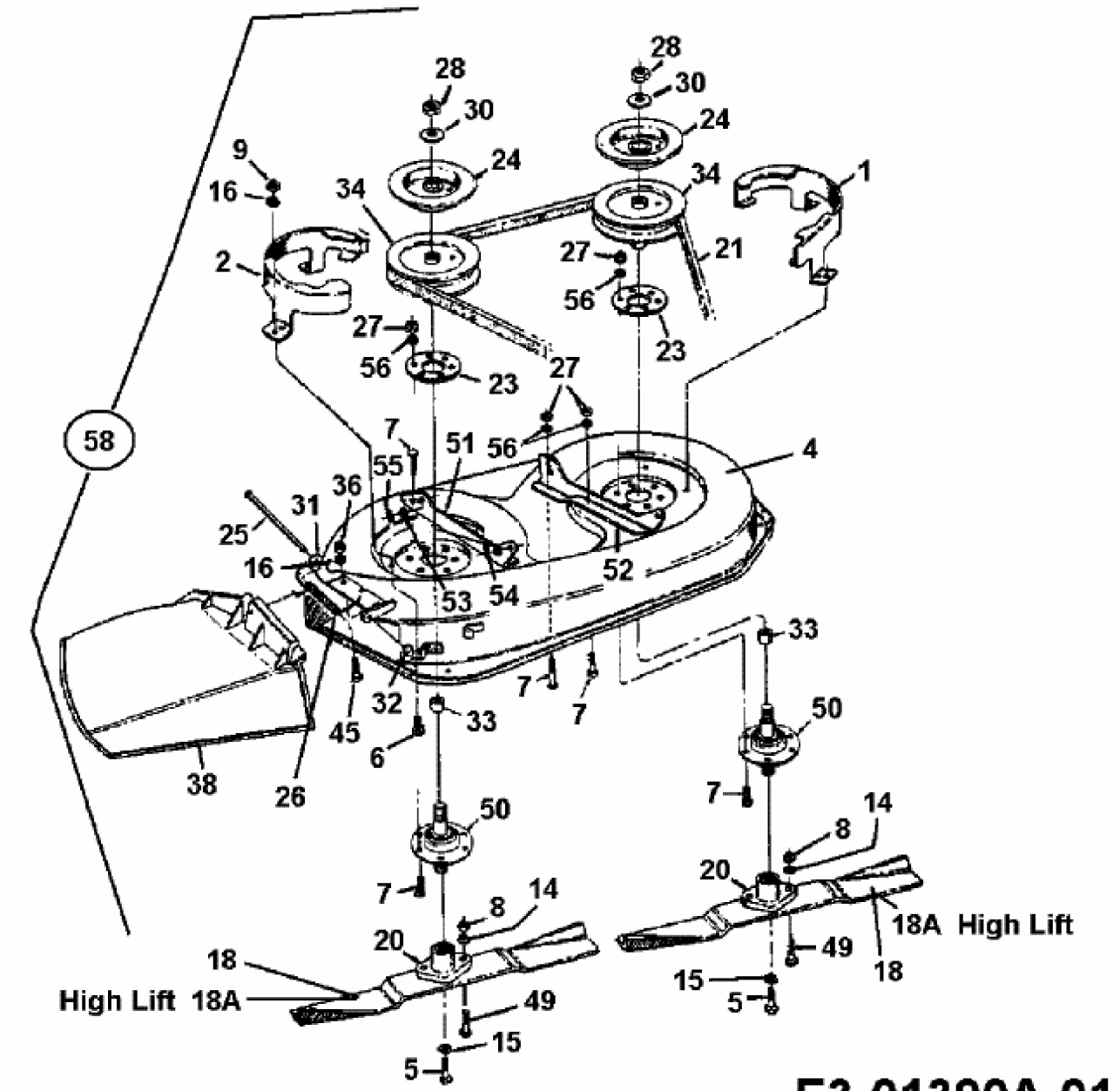
28
30
24
9
16
34
1
2
27
21
56
23
58
7
51
55
36
31
25
4
52
53
54
33
32
45
6
38
26
50
14
8
20
18A High Lift
18
49
15
5
High Lift 18A
E3-01390A-01
fsg