Hood Assembly

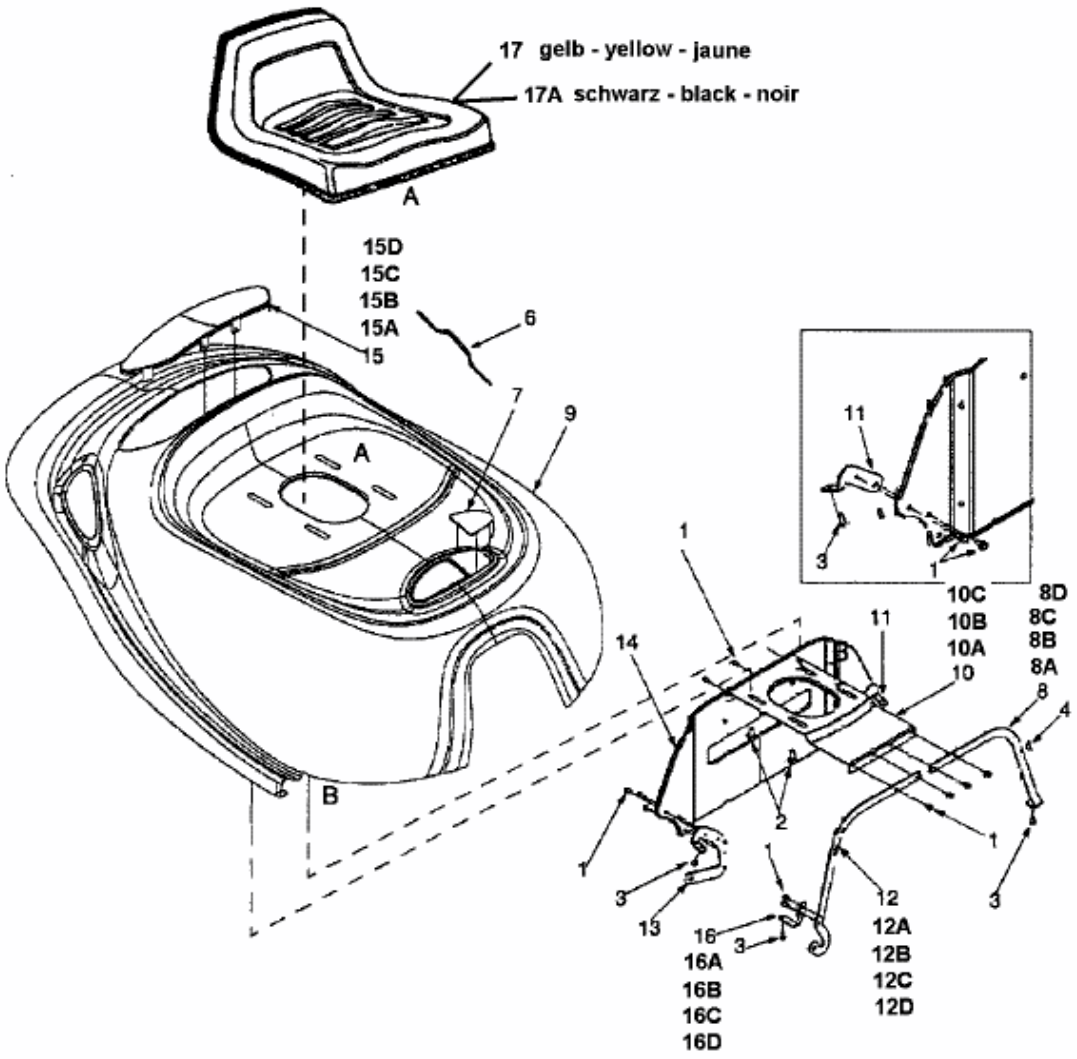

E4-00729 A