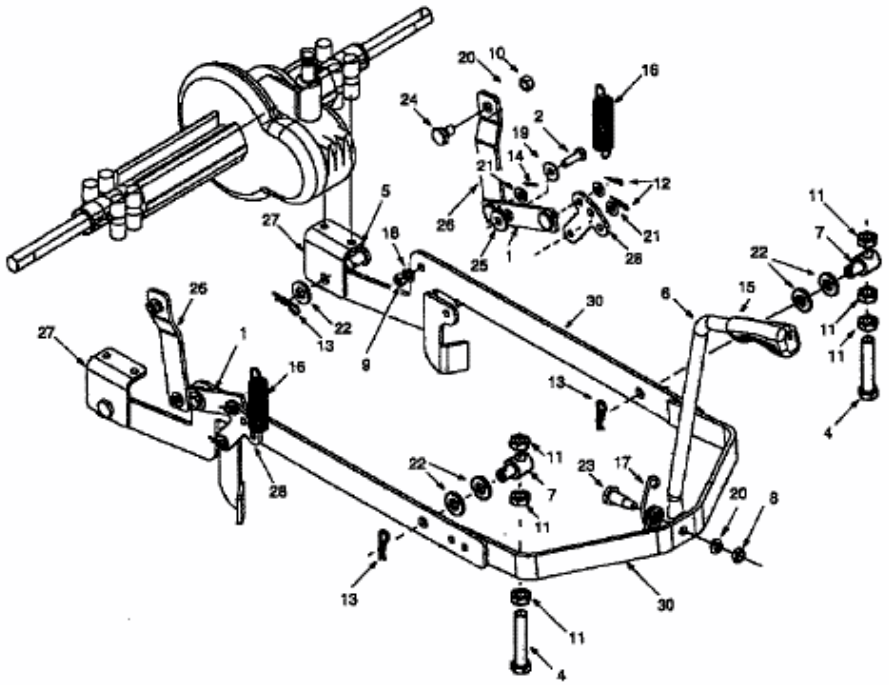Deck Hanger Link