Variable Drive:

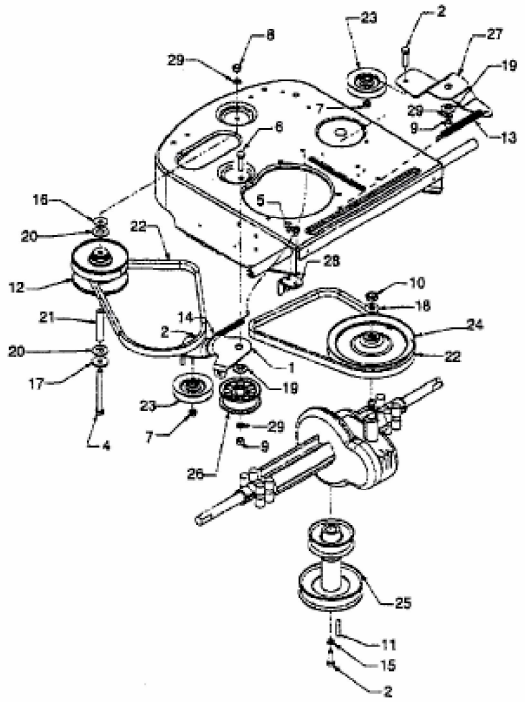

E4-00726 A