Model 310
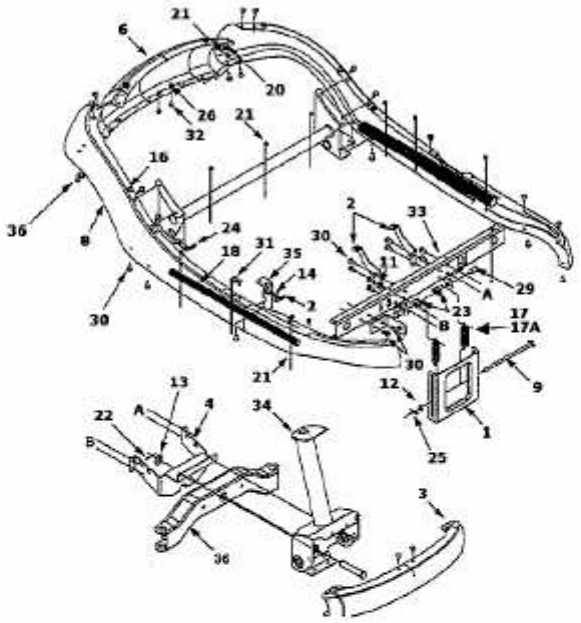
Upper Frame