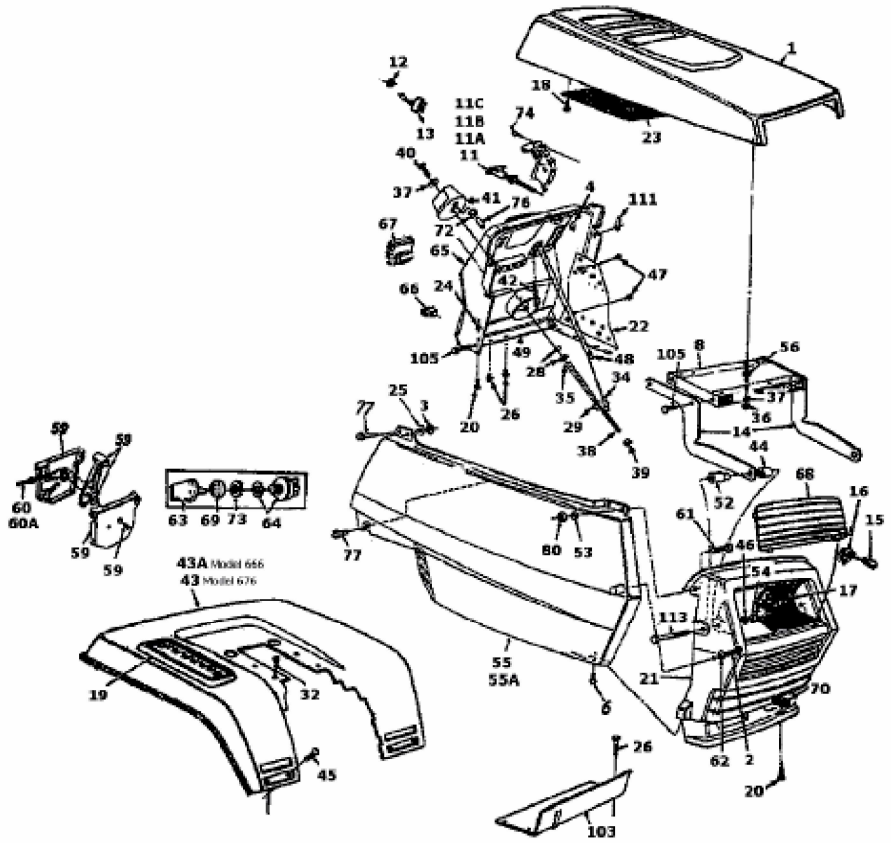Models 666 and 676