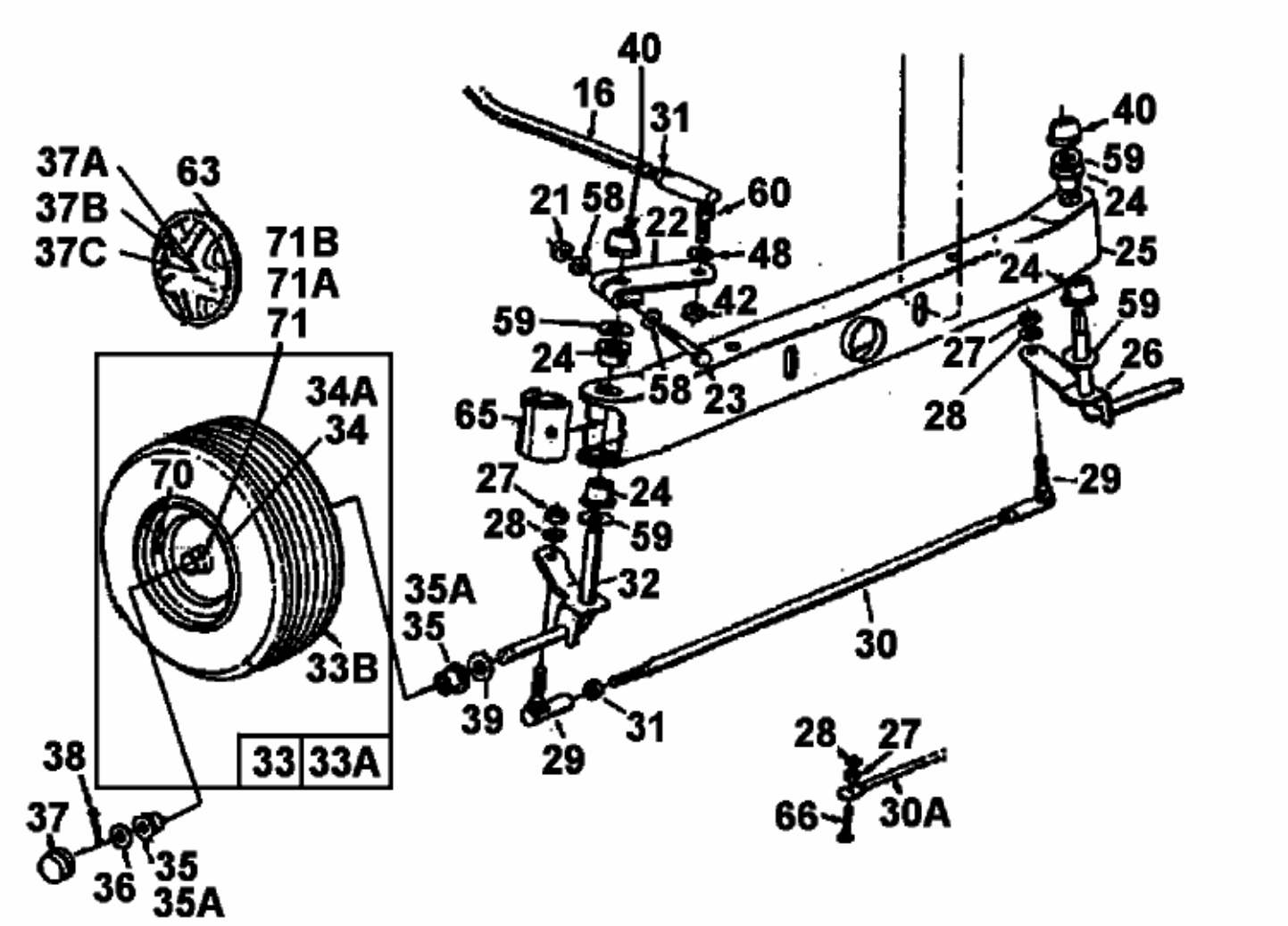RMH 13.5-120 > 136A764N643 (1996) > VORDERACHSE