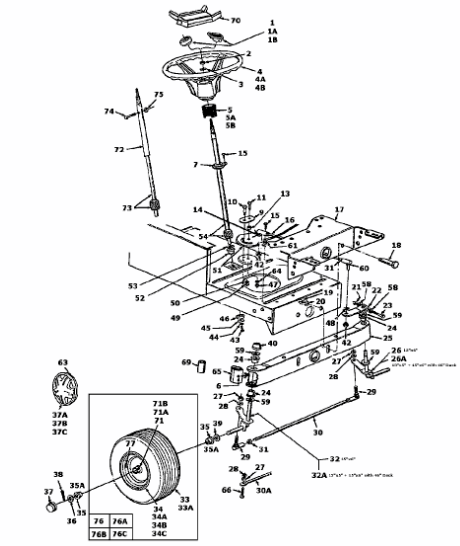Models 600 thru 609 Models 690 thru 699