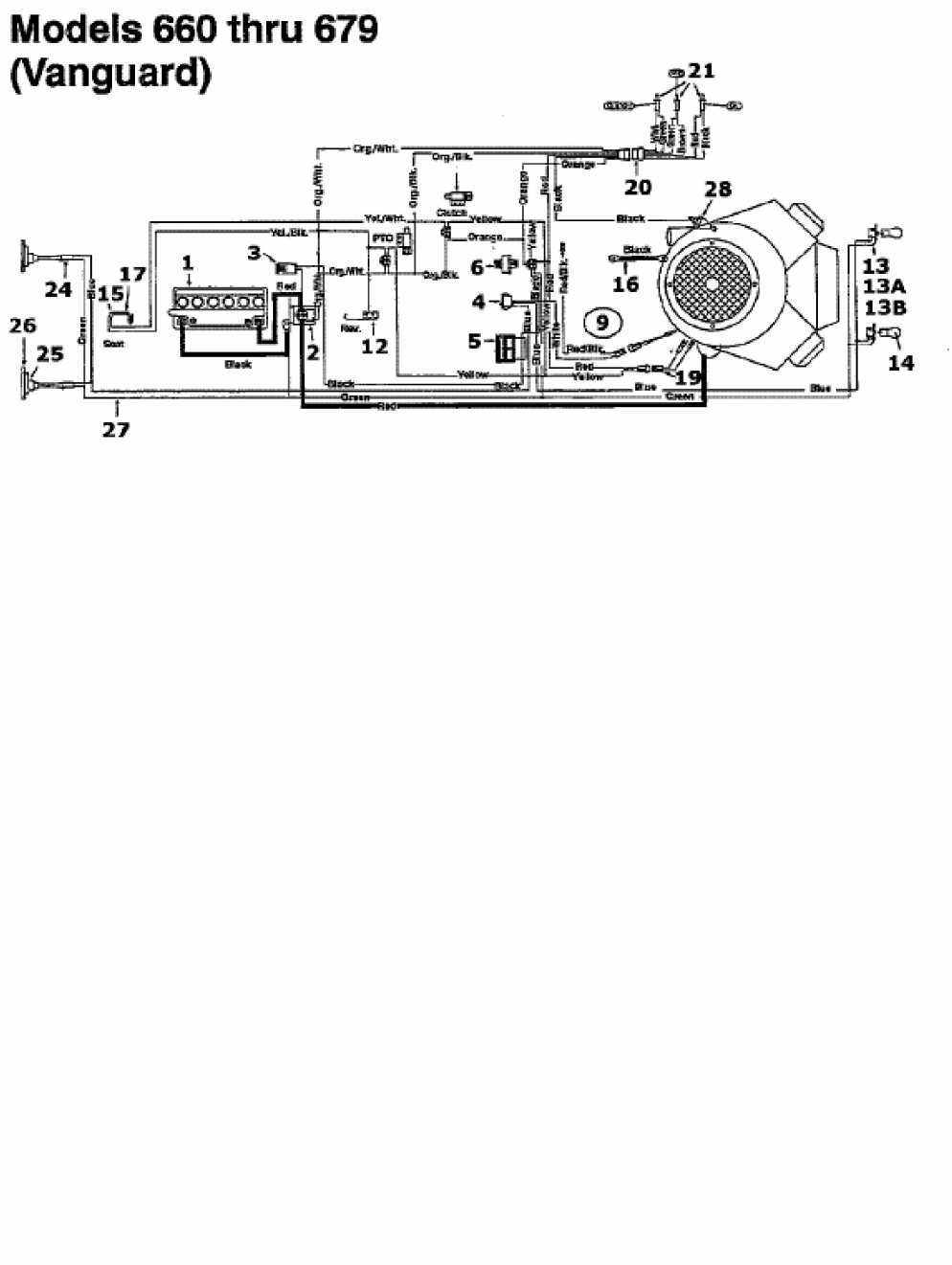ST 12.5/91 > 135L664E632 (1995) > SCHALTPLAN VANGUARD