FLORASELF 2000 > 135C452D668 (1995) > ARMATURENBRETT

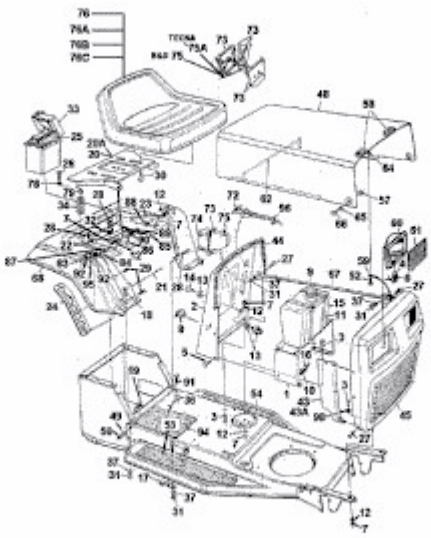

fig