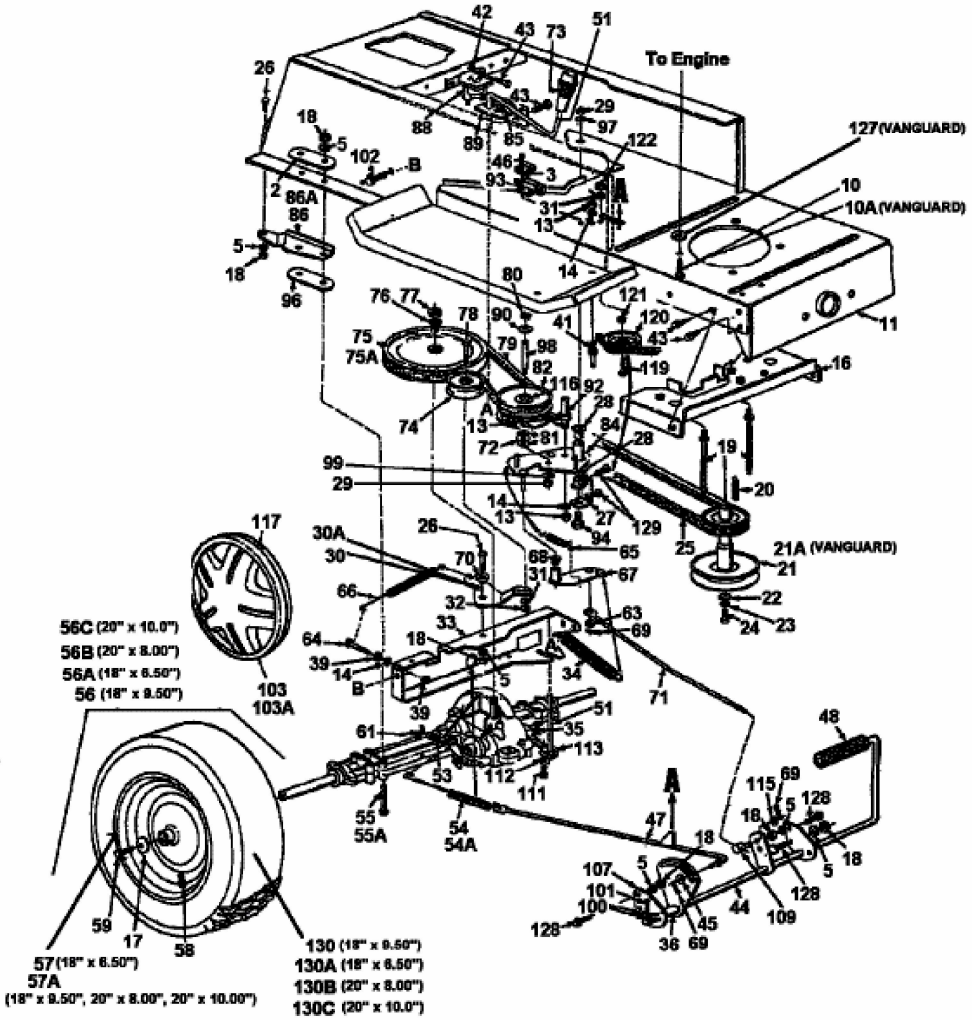Models 660 thru 679 (Twin Cylinder)