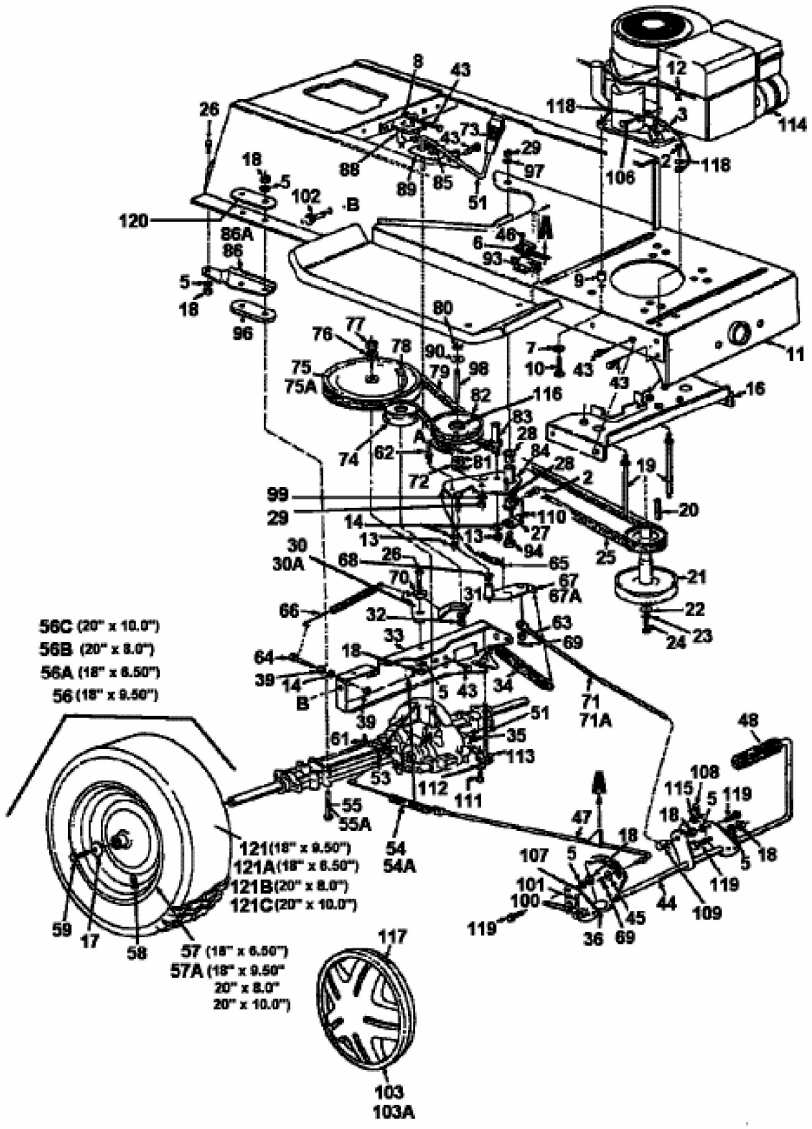Models 660 thru 679 (Single Cylinder)