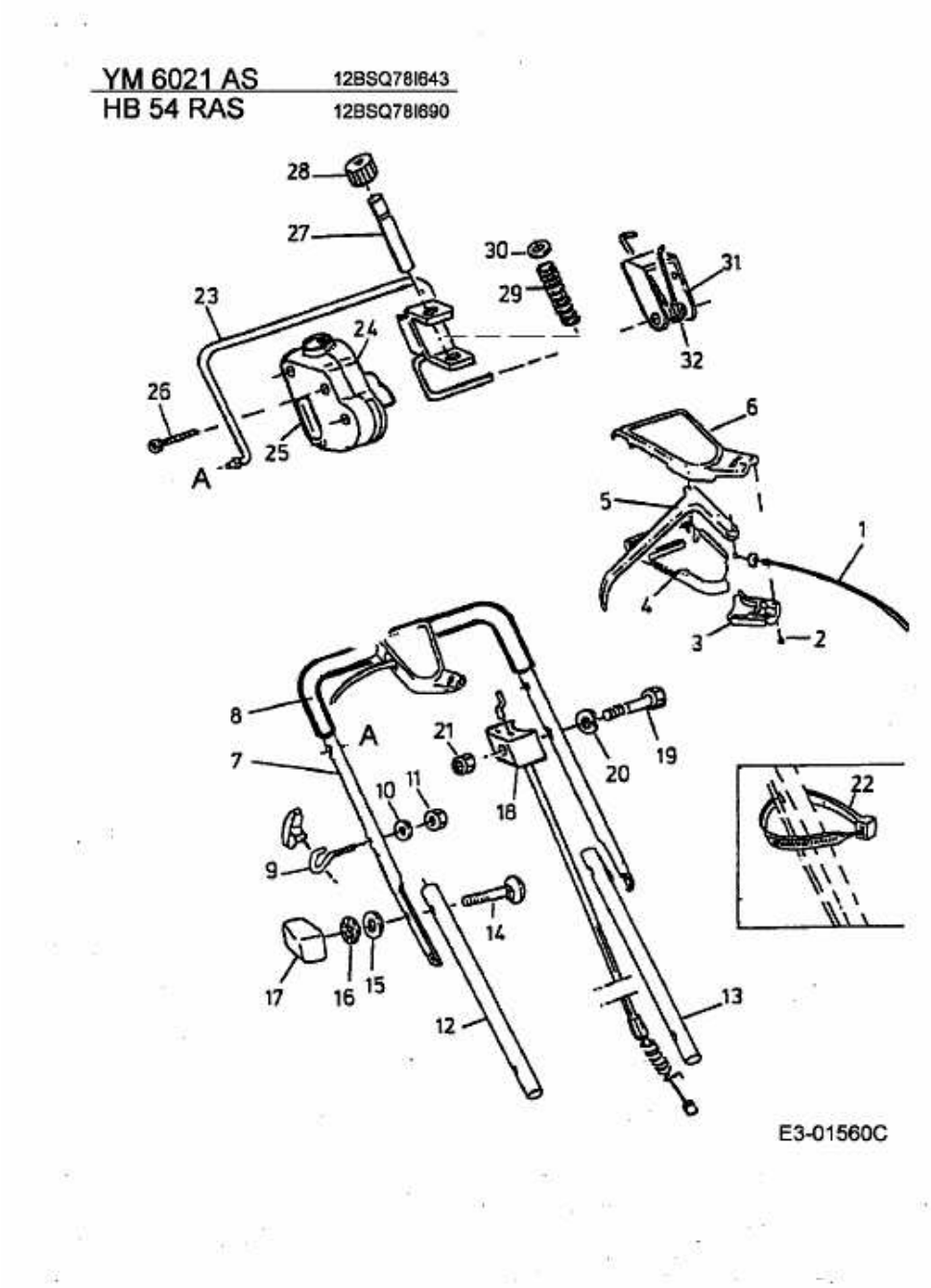YM 6021 AS > 12BSQ78I643 (2003) > OBERHOLM