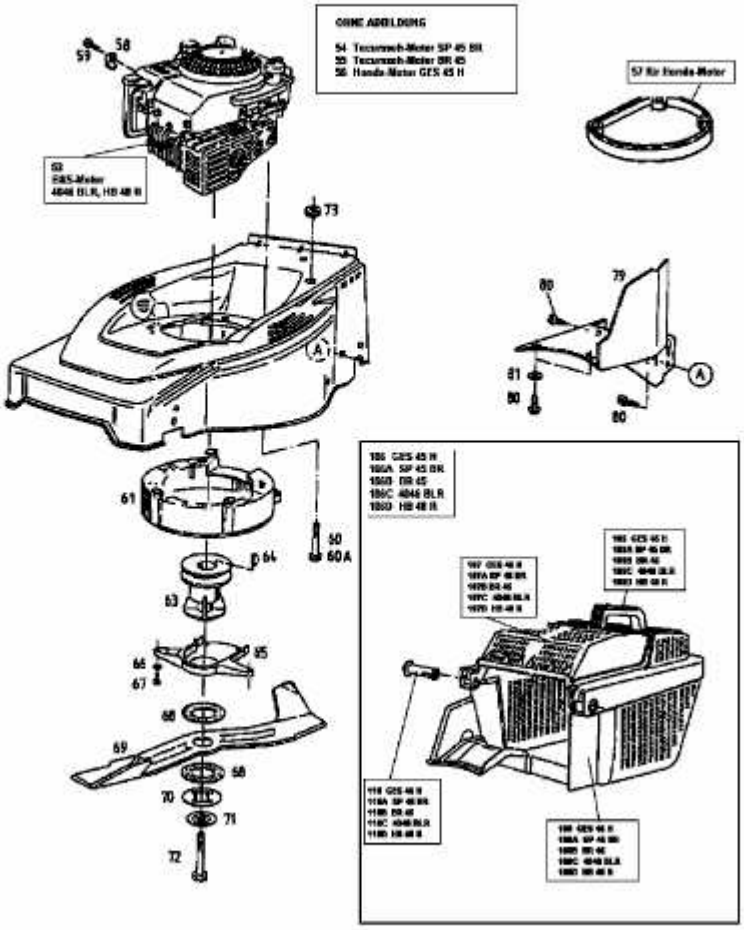HB 48 R > 12B-T14Z604 (1999) > GRASFANGKORB, MESSER, MOTOR