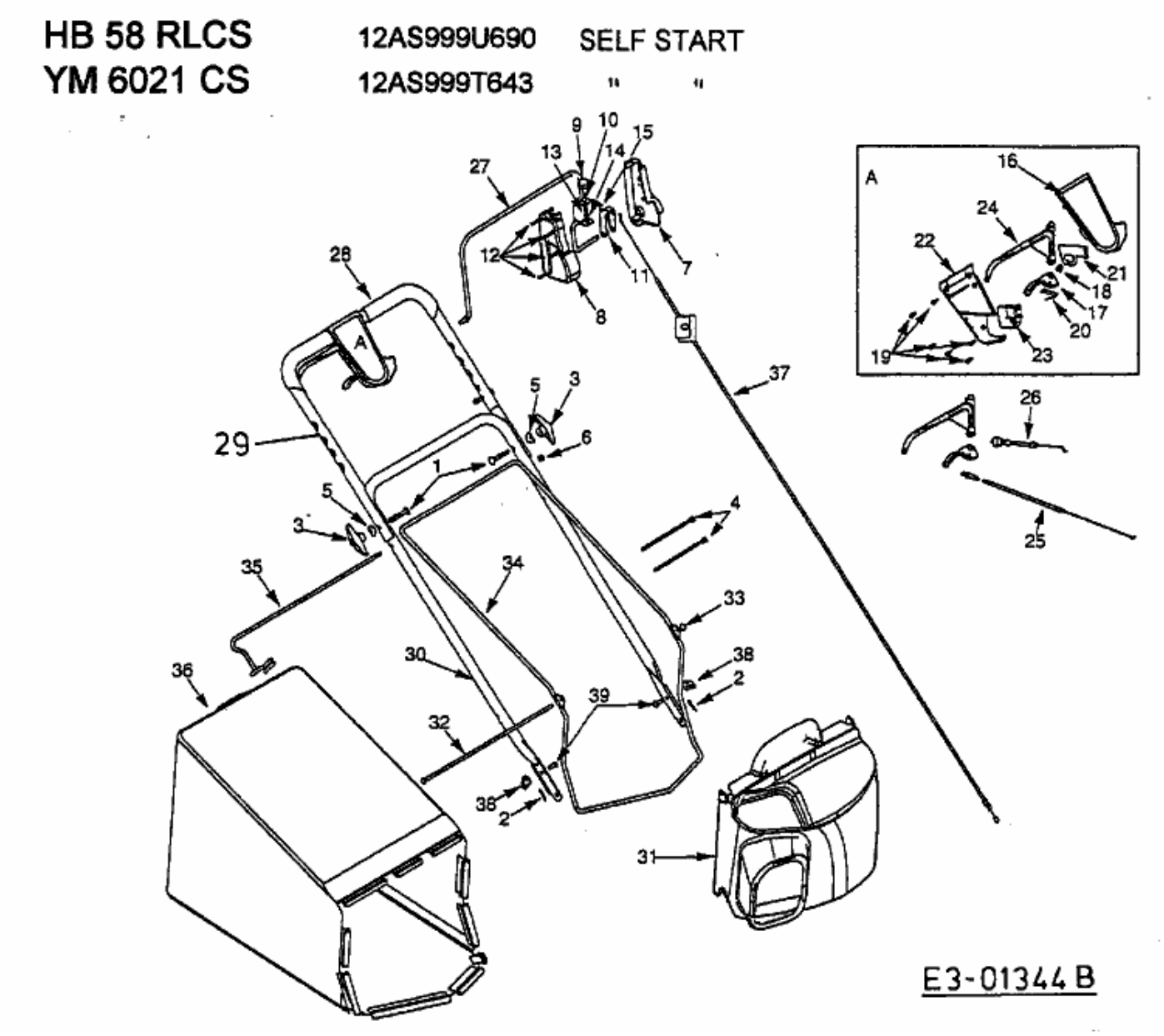YM 6021 CS > 12AS999T643 (2002) > GRASFANGSACK, HOLM