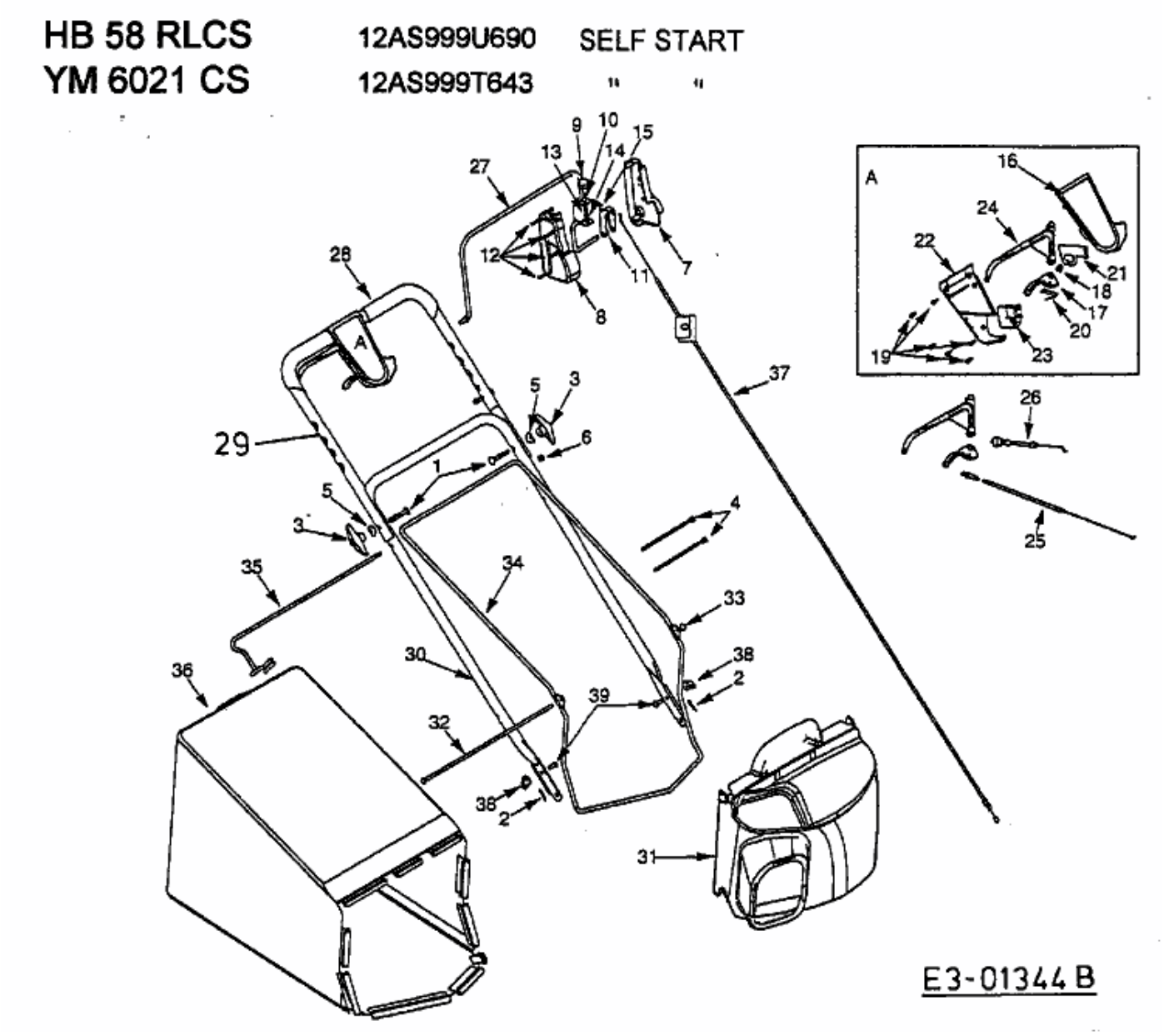YM 6021 CS > 12AS998I643 (2005) > GRASFANGSACK, HOLM