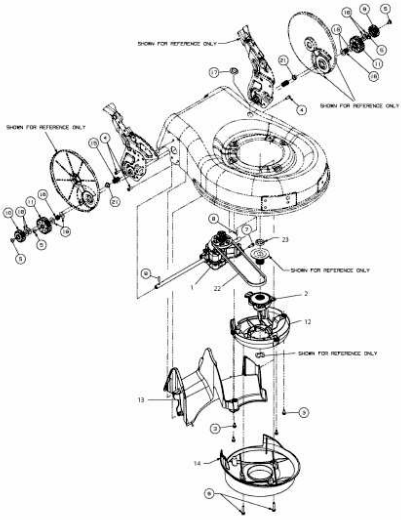
SHOWN FOR REFERENCE ONLY
SHOWN FOR REFERENCE ONLY
SHOWN FOR REFERENCE ONLY
SHOWN FOR REFERENCE ONLY
SHOWN FOR REFERENCE ONLY

E3-05534A-01