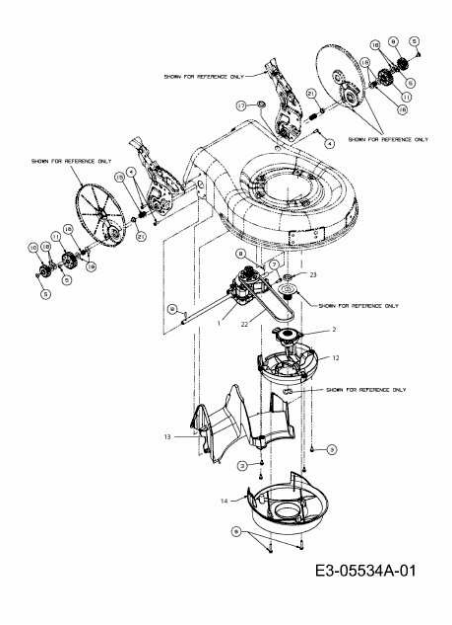
SHOWN FOR REFERENCE ONLY
SHOWN FOR REFERENCE ONLY
SHOWN FOR REFERENCE ONLY
SHOWN FOR REFERENCE ONLY
SHOWN FOR REFERENCE ONLY
E3-05534A-01