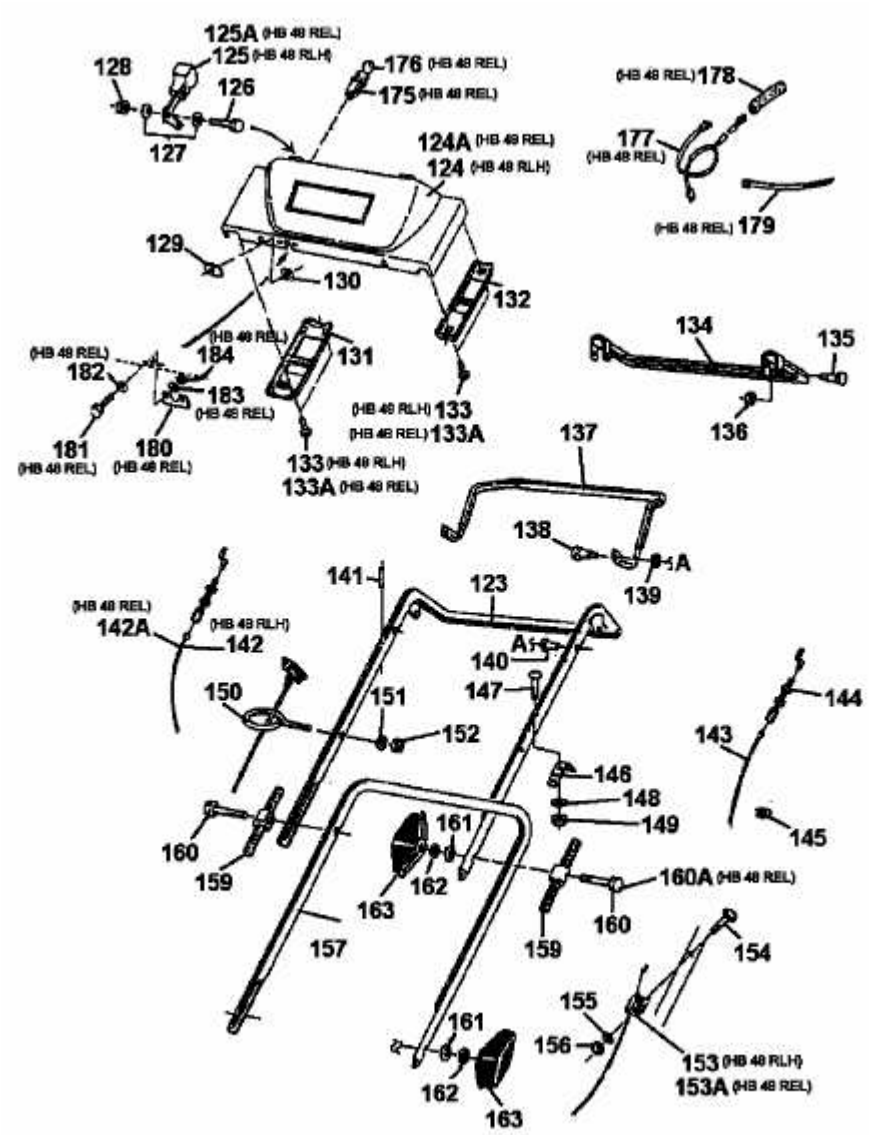HB 48 REL > 12AET58W604 (1999) > HOLM