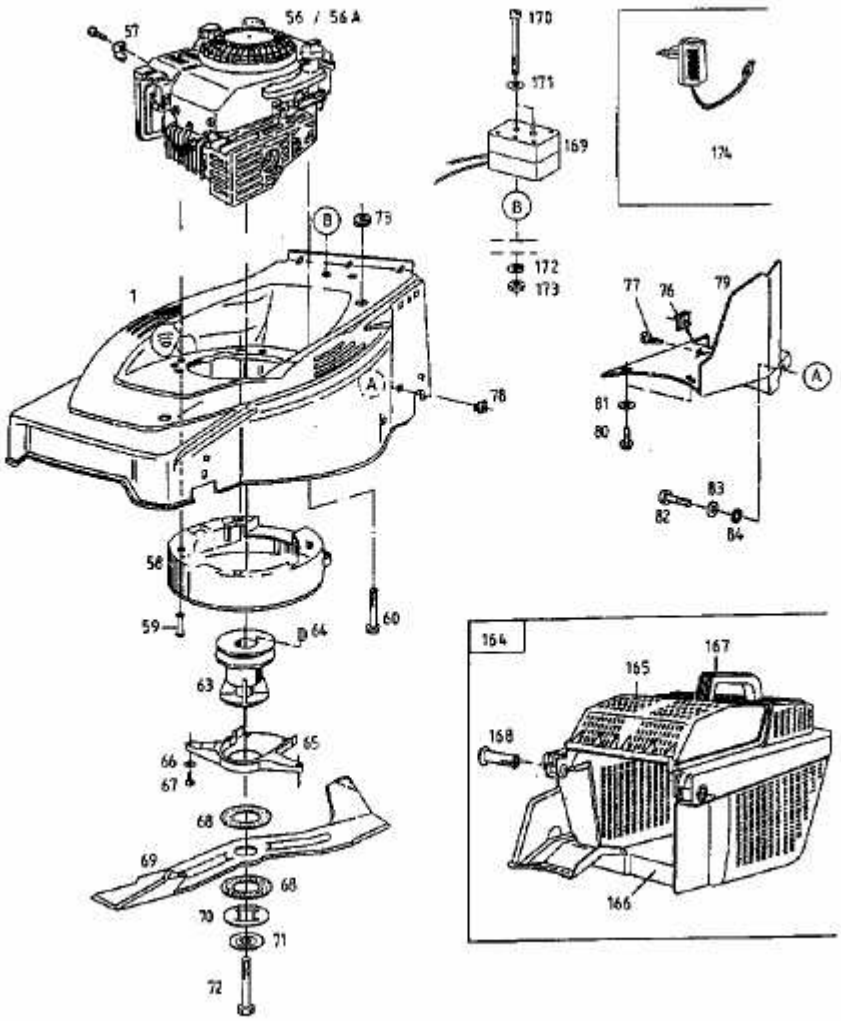HB 48 REL > 12AET58U604 (1998) > ELEKTROTEILE, GRASFANGKORB, MESSER, MOTOR