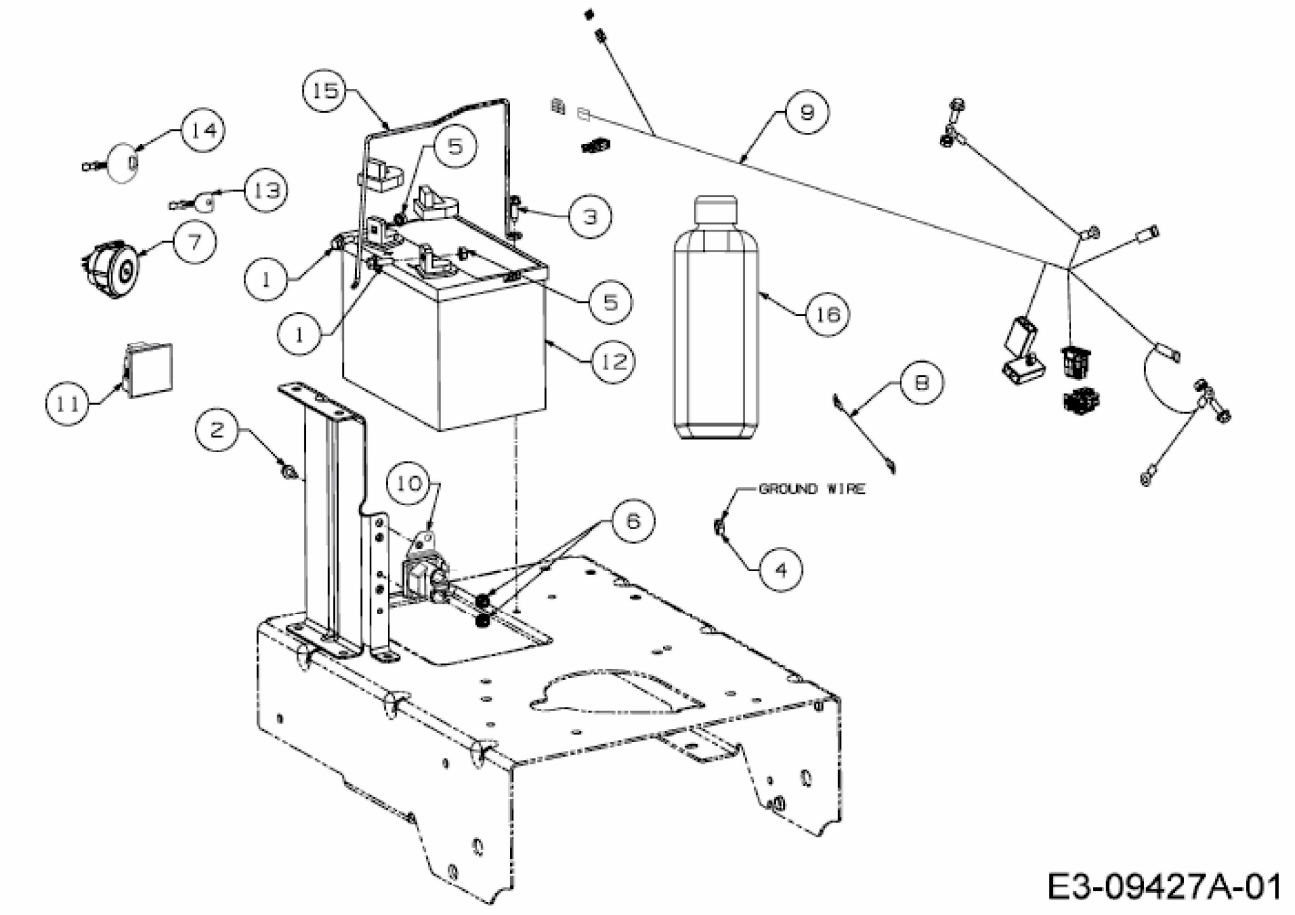
15
14
13
7
11
2
1
1
5
5
3
12
10
6
9
16
8
GROUND WIRE
4
E3-09427A-01