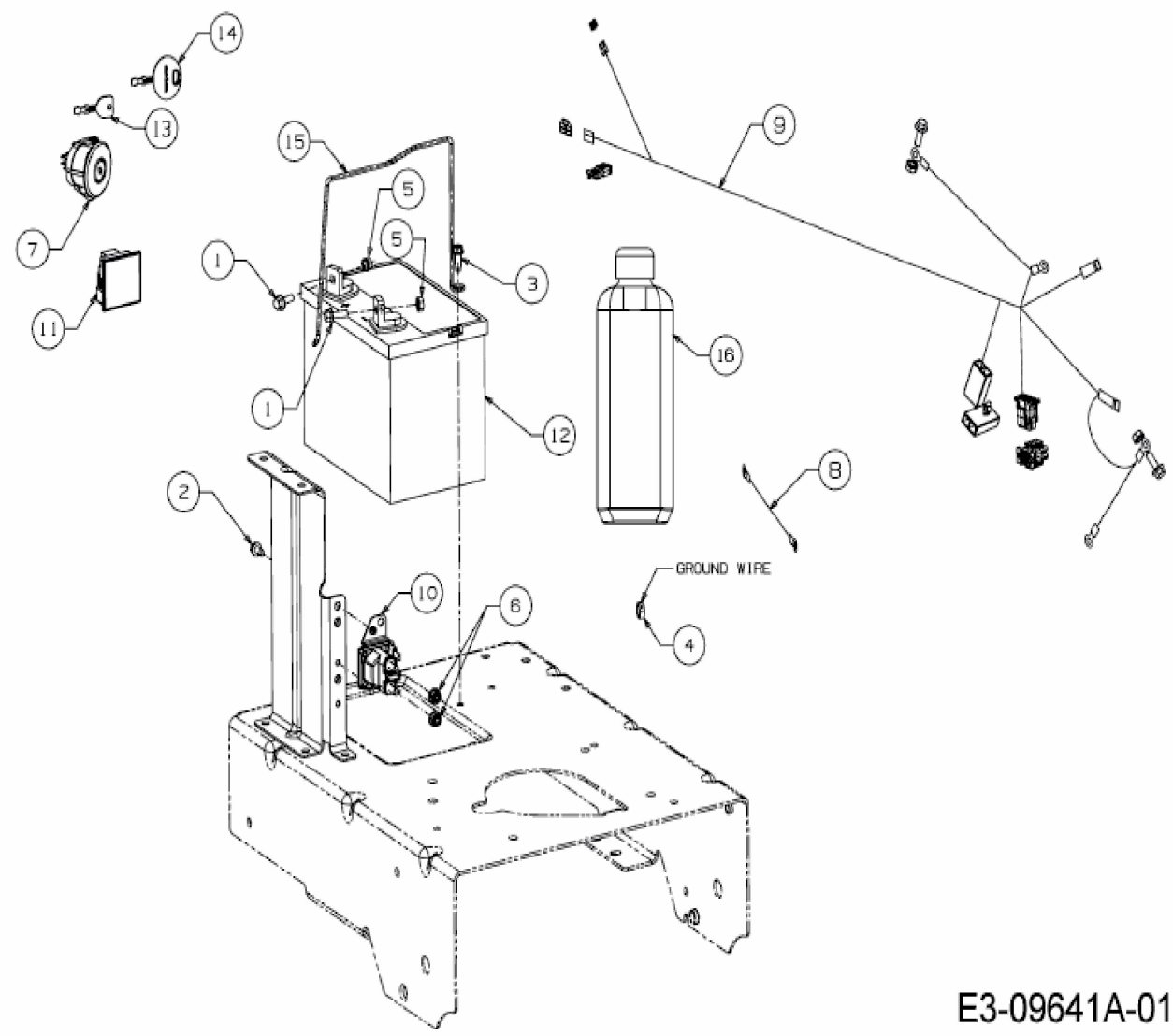
14
13
15
5
5
9
7
1
3
11
16
1
12
8
2
GROUND WIRE
10
6
4
E3-09641A-01