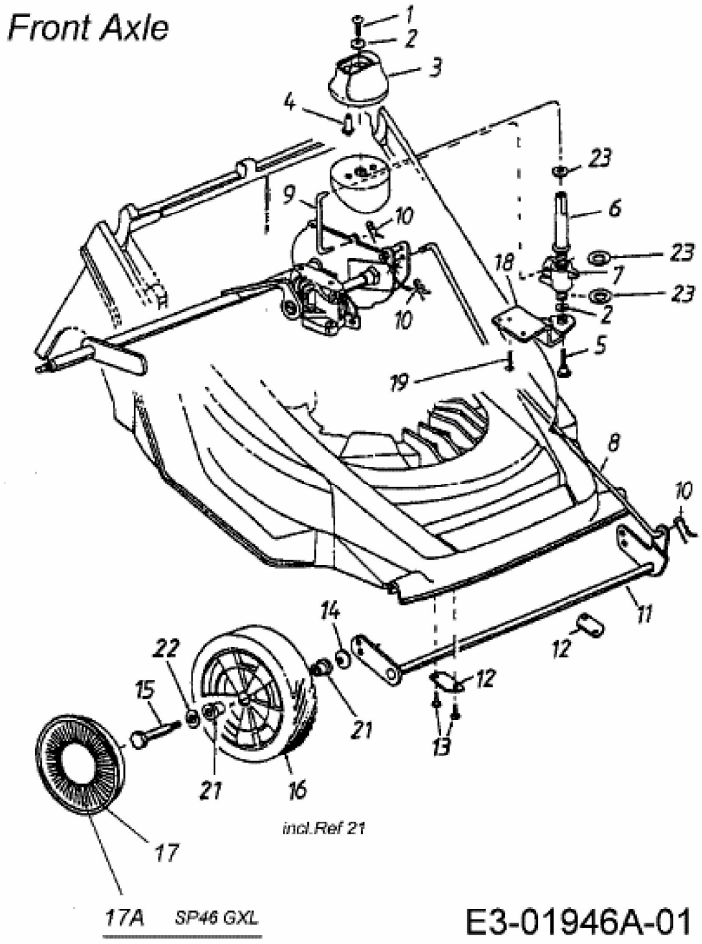
Front Axle
1
2
3
4
23
6
9
10
23
18
7
23
2
10
5
19
8
10
11
14
12
22
12
15
21
13
21
16
incl.Ref 21
17
17A SP46 GXL
E3-01946A-01