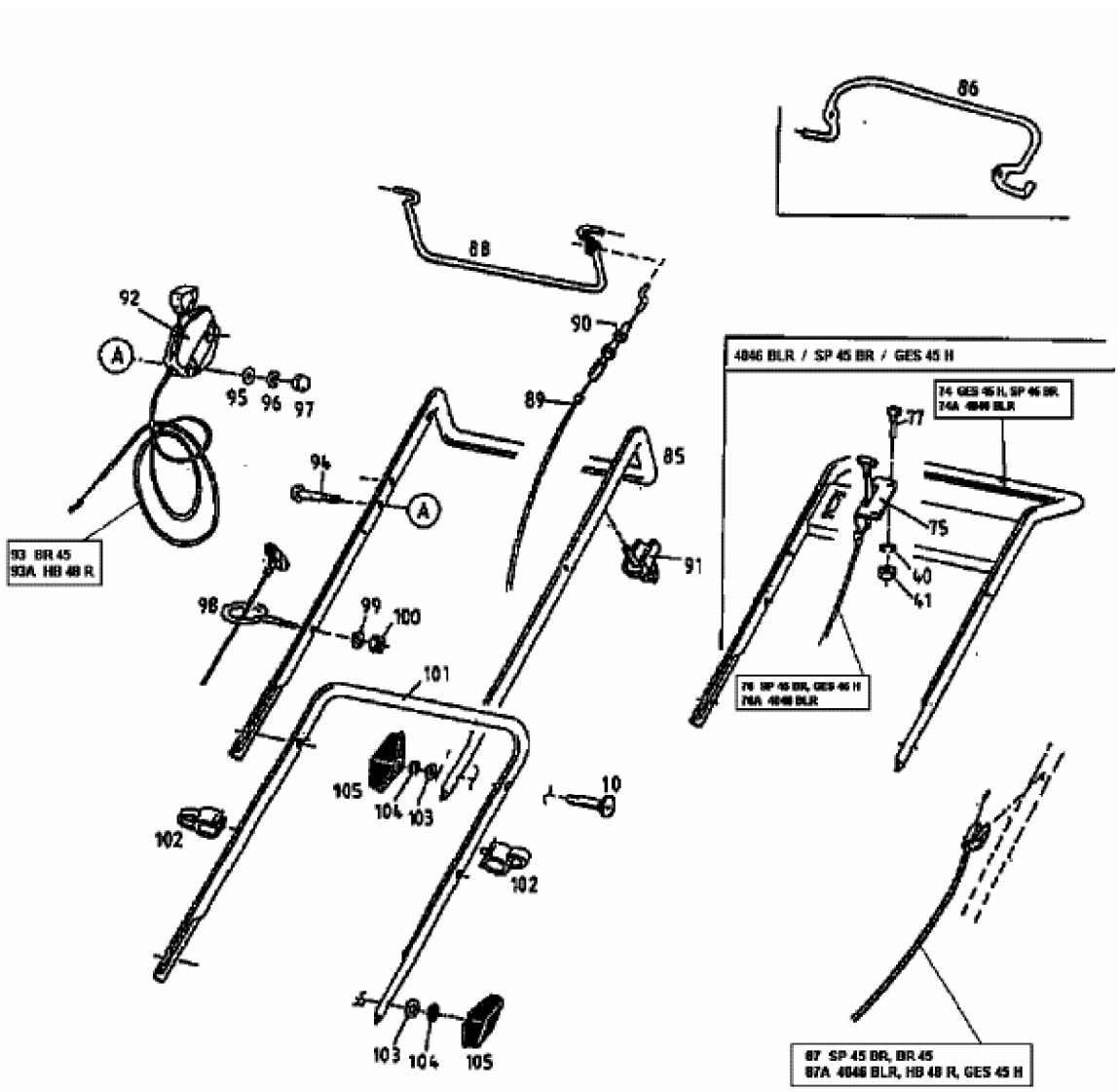SP 45 BR > 12A-T13Y667 (1999) > HOLM