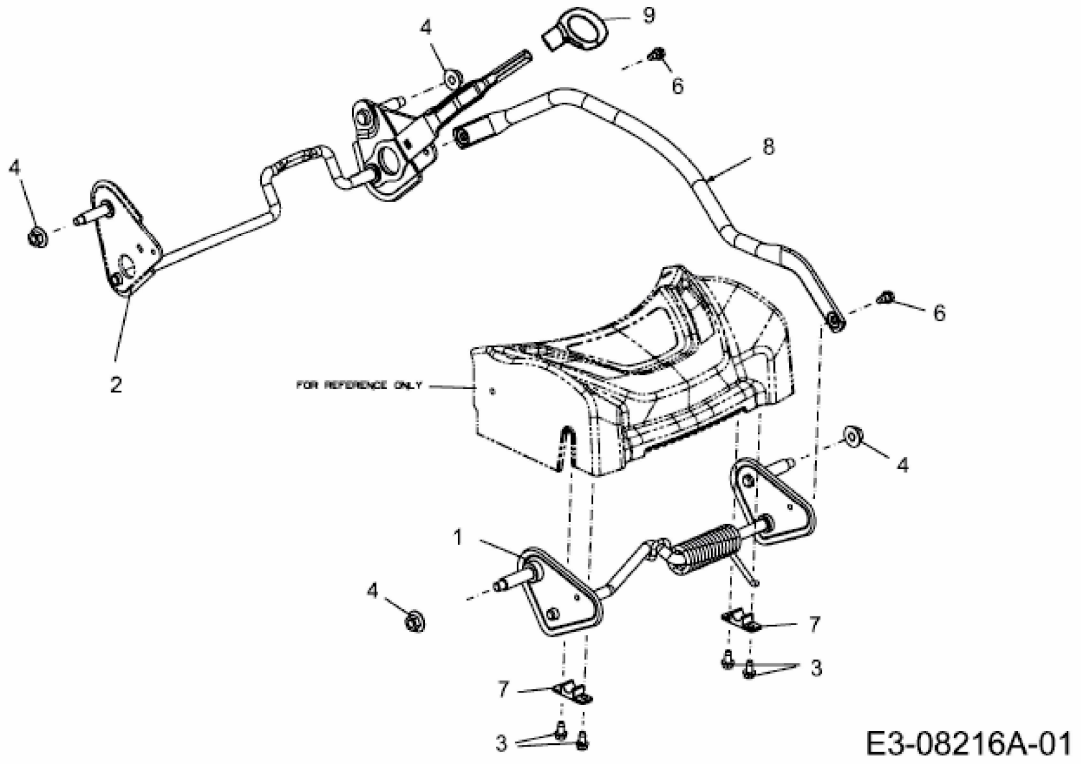
9
4
6
8
4
6
2
FOR REFERENCE ONLY
4
1
4
7
3
7
3
E3-08216A-01