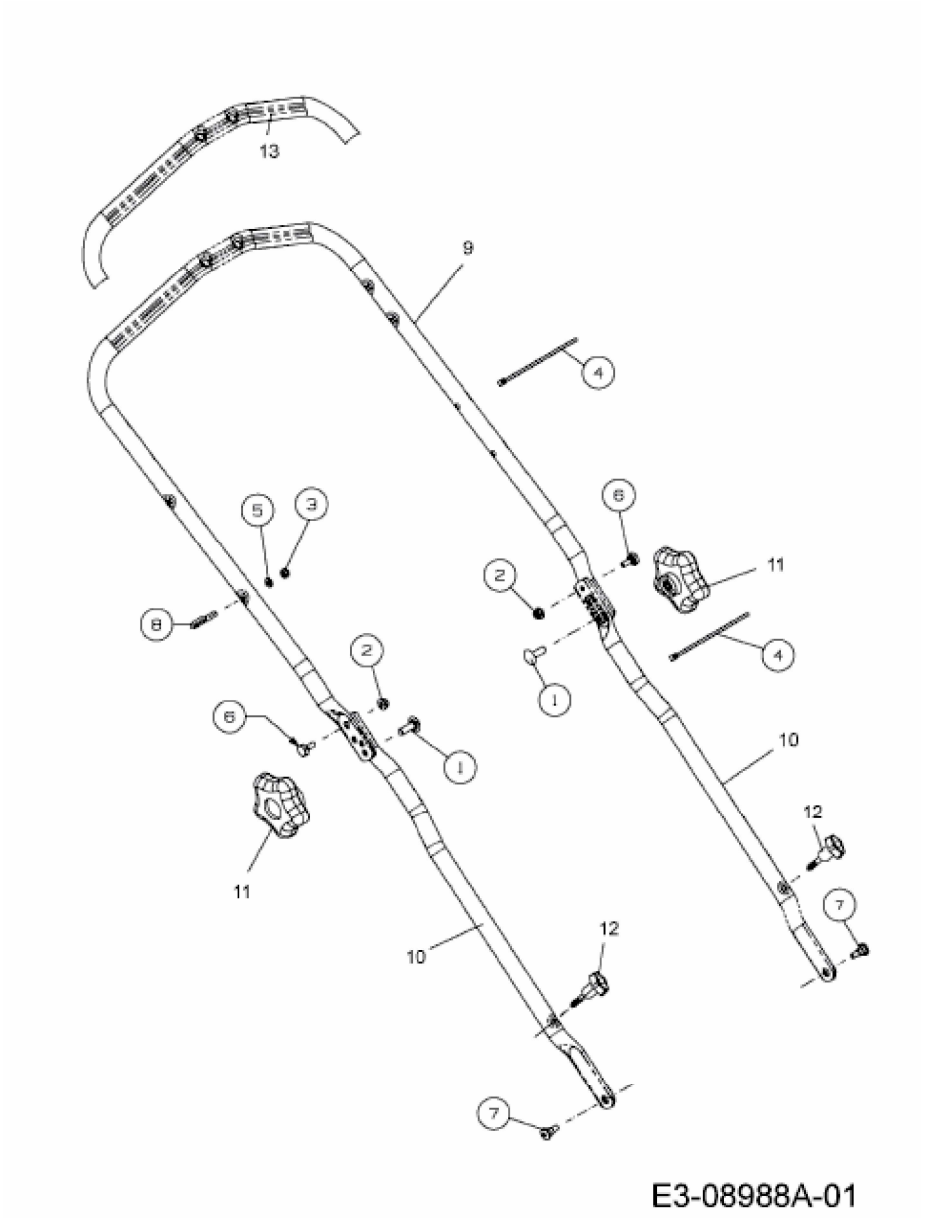BE 53 HW > 12A-PH5L648 (2015) > HOLM