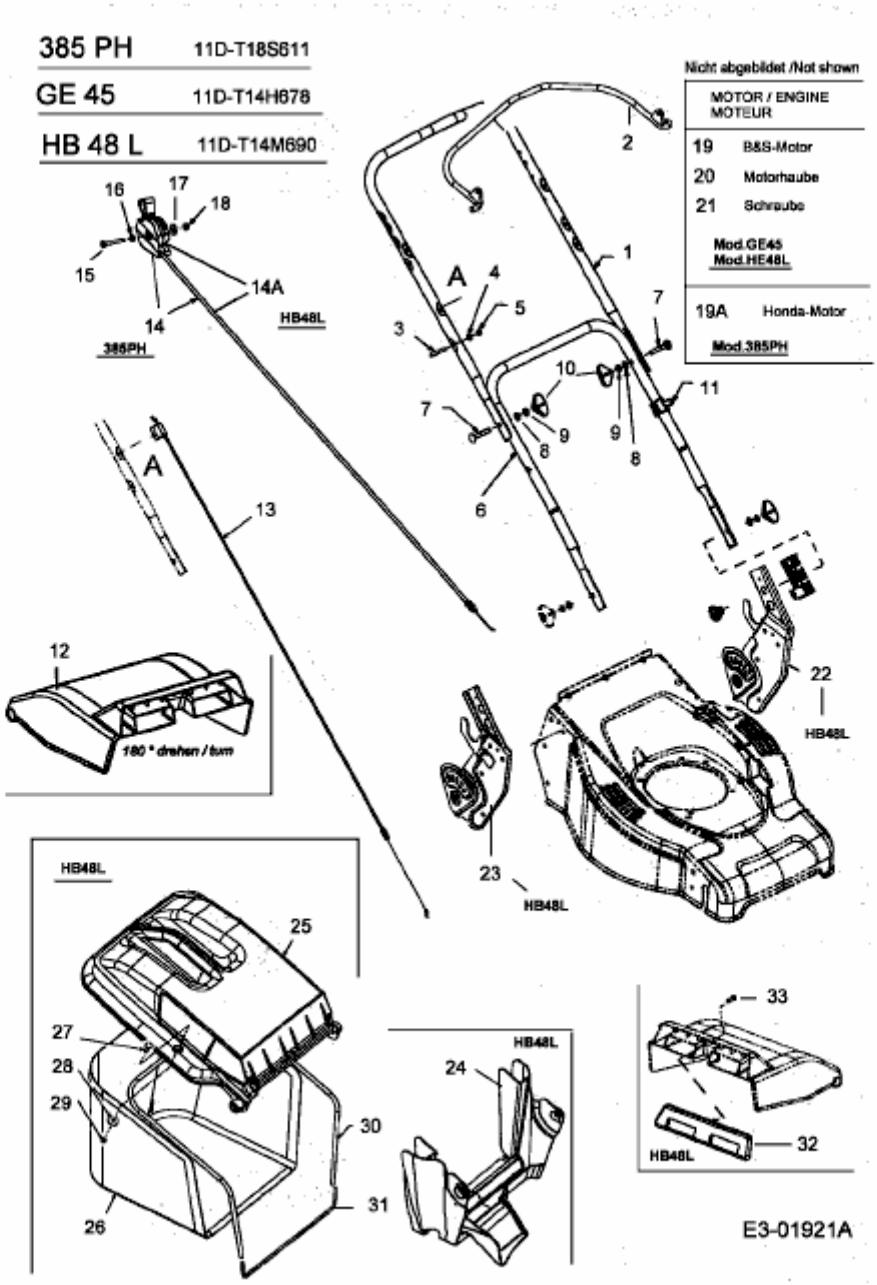385 PH > 11D-T18S611 (2004) > HOLM