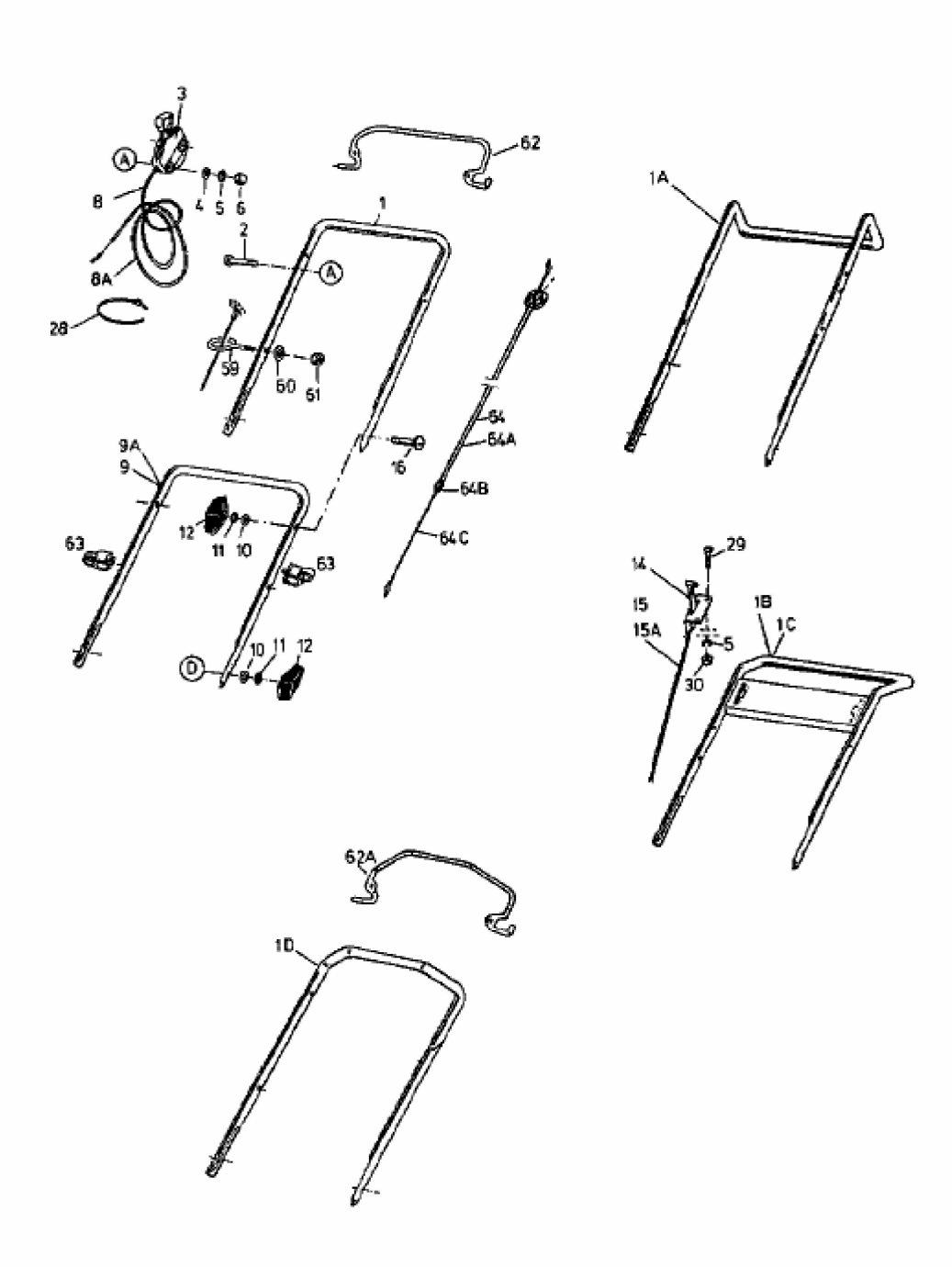B 45 > 11B-T11Z628 (2000) > HOLM