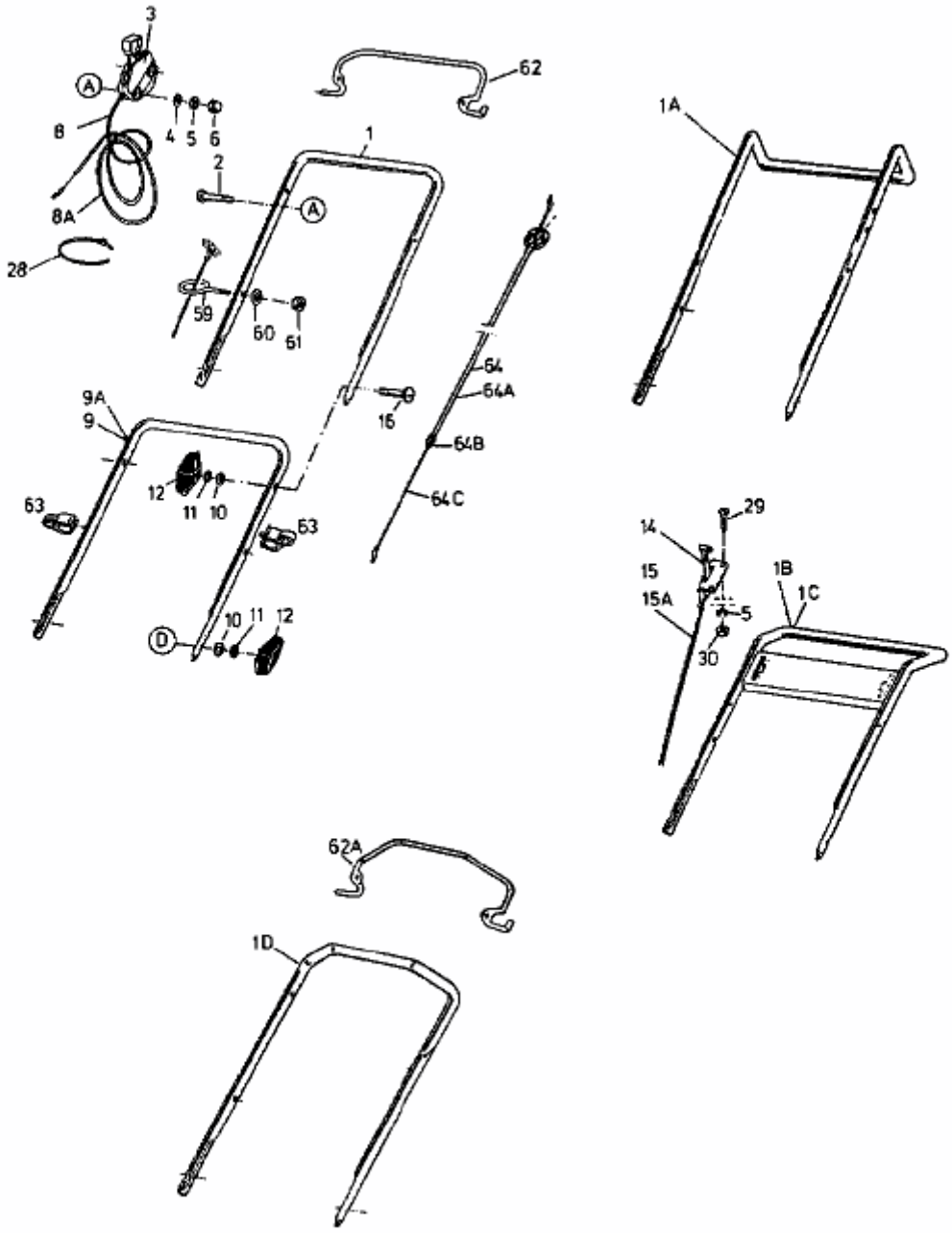GE 45 > 11B-T02Z678 (2000) > HOLM