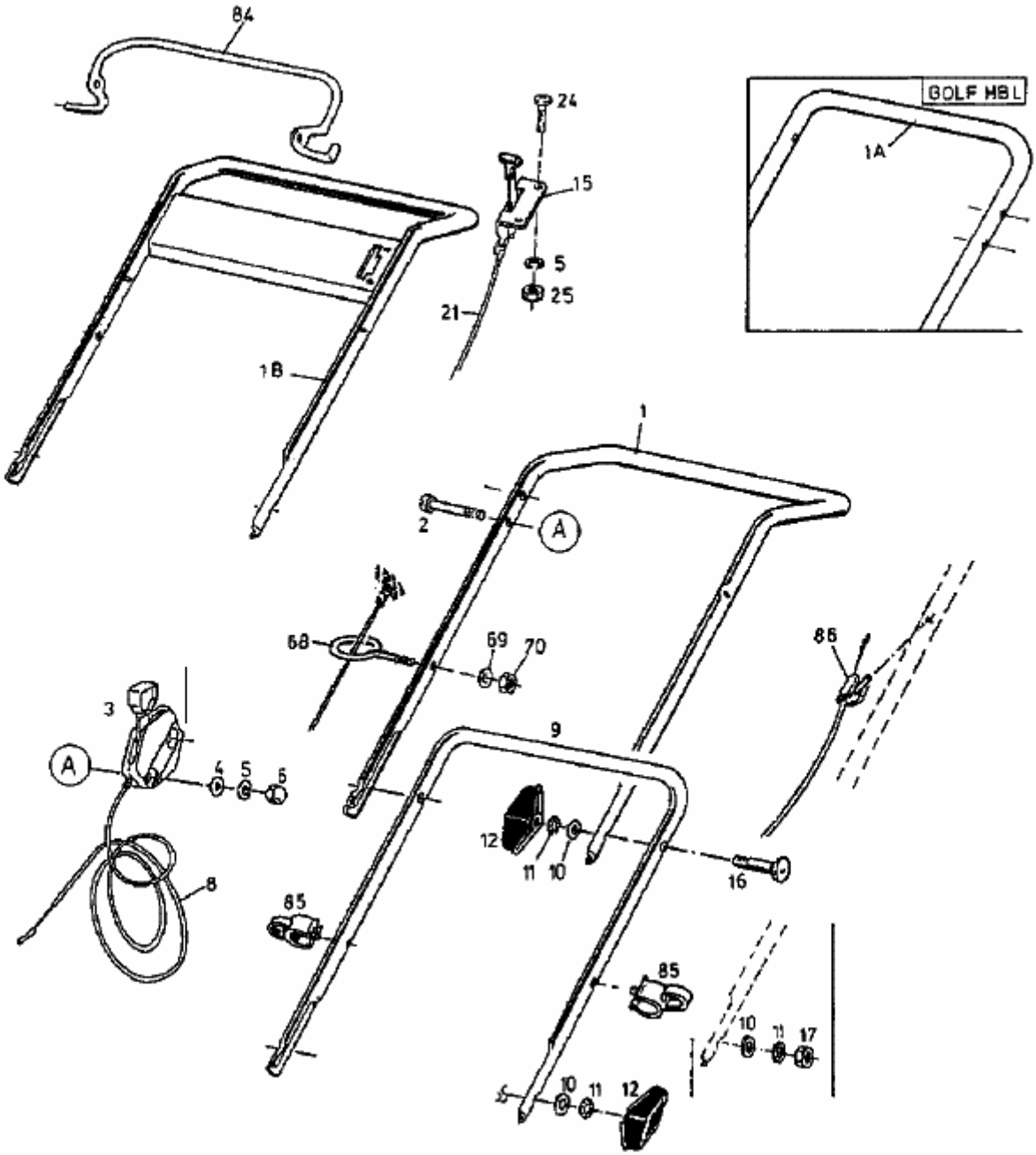GOLF HBL > 11A-T15Z648 (1998) > HOLM