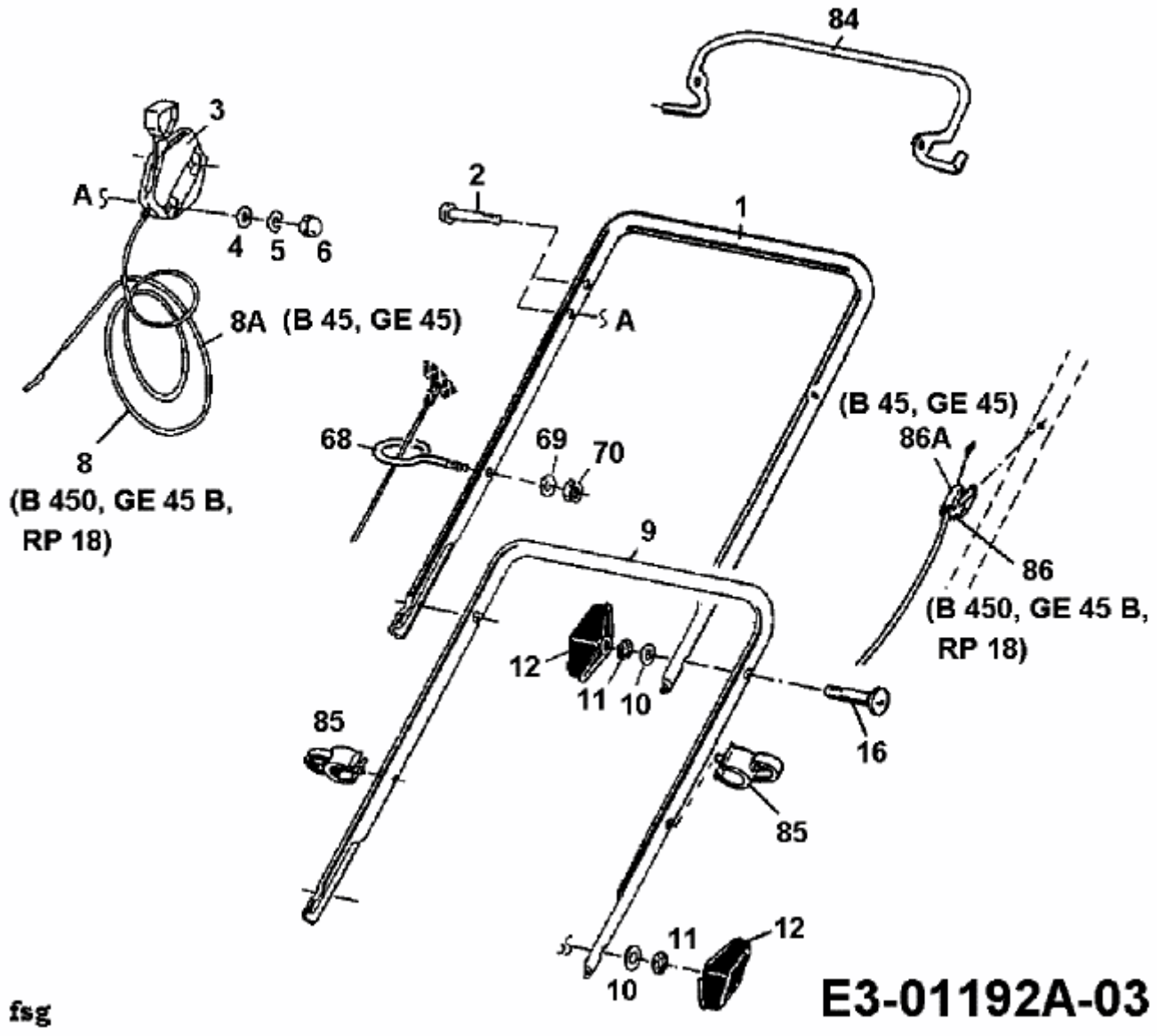B 45 > 11A-T01Z600 (1998) > HOLM