Parts Catalog

MODEL	PRODUCT CODE
KT12AD	31157DA
KT12AD	TZ022D-AA50, BA50, CA50

Kawasaki

© KAWASAKI HEAVY INDUSTRIES, LTD.
ENGINE DIVISION
860723 Printed in Japan

KT12AD 31157DA
KT12AD TZ022D-AA50,BA50,CA50

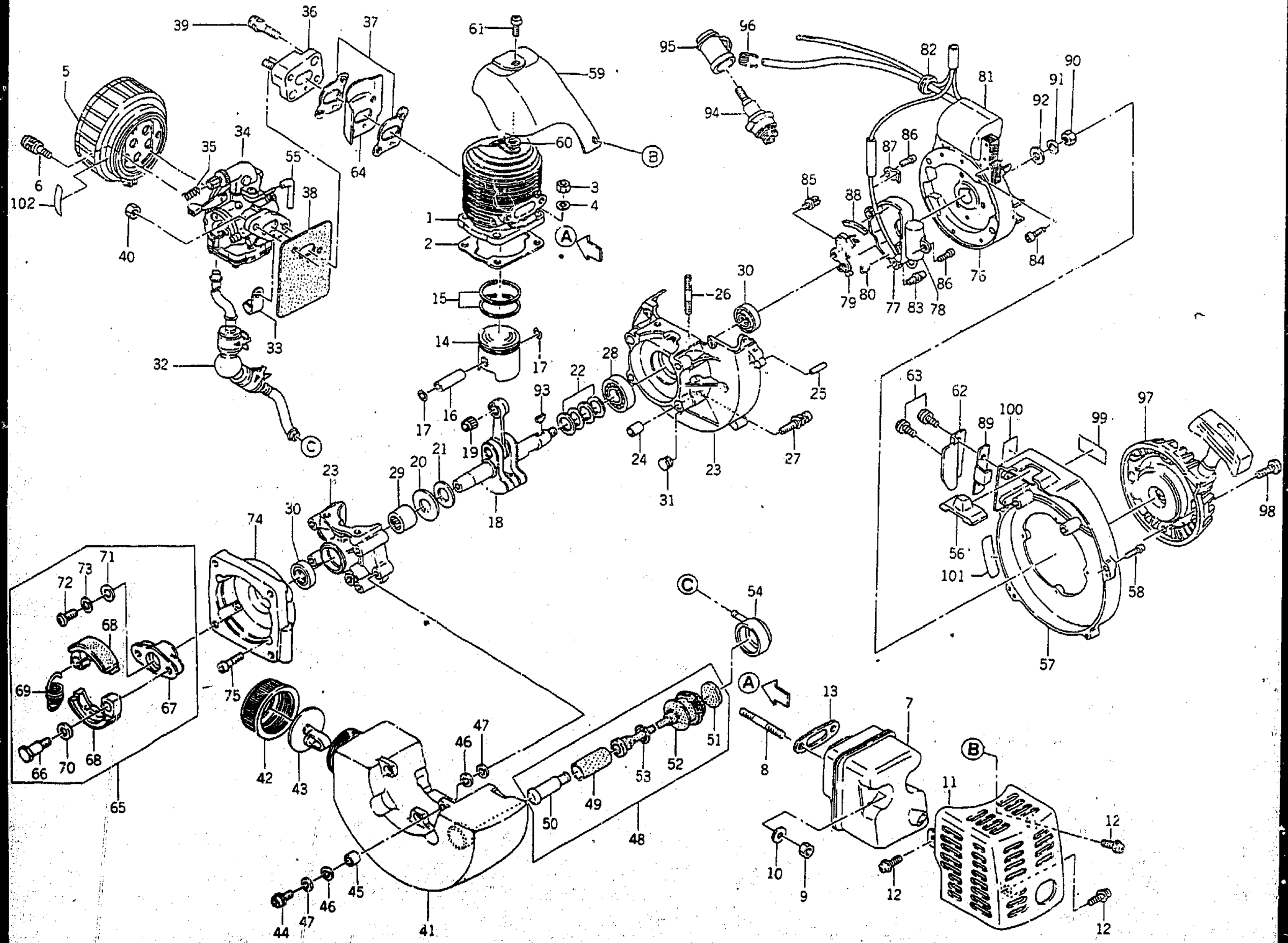

KT12AD 31157DA (A)
KT12AD TZ022D-AA50,BA50,CA50(A,B,C)

Ref.No.	Part No.	Part Name	Quantity						Remarks
			A	B	C				
1	311509-1211D	CYLINDER	1	1	1				
2	311509-1221-00	GASKET	1	1	1				
3	311B0500A	NUT (5mm)	4	4	4				
4	461F0500A	WASHER, spring	4	4	4				
5	311509-1310-02	AIR CLEANER ASSY	1	1	1				Fig. A-1
6	232B0410A	SCREW (4x10)	2	2	2				
7	311509-1410-01	MUFFLER ASSY	1	1	1				
8	172G0564A	STUD	2	2	2				
9	311B0500A	NUT (5mm)	2	2	2				
10	410B0500	WASHER	2	2	2				
11	3115AA-1431A	COVER, muffler	1	1	1				
12	241B0408	SCREW (4x8)	3	3	3				
13	311501-1443-03	GASKET	1	1	1				
14	311501-3111C	PISTON	1	1	1				
15	311220-3010-00	PISTON RING SET	1	1	1				
16	310201-3121A	PIN, piston	1	1	1				
17	311501-3122A	RING, snap	2	2	2				
18	311501-3210B	CRANK SHAFT ASSY	1	1	1				
19	311509-3242A	•BEARING, needle	1	1	1				
20	311501-3227-00	WASHER	1	1	1				
21	311501-3228-00	WASHER	1	1	1				
22	311501-3231-00	SHIM	AR	AR	AR				t=0.1
	311501-3232-00	SHIM	AR	AR	AR				t=0.2
	311501-3233-00	SHIM	AR	AR	AR				t=0.4
	311501-3234-00	SHIM	AR	AR	AR				t=0.6
23	311509-4110B	CRANK CASE ASSY	1	1	1				
24	311220-4115-00	•PIN, dowel	2	2	2				
25	551A0410	•PIN, dowel	2	2	2				
26	172G0514A	•STUD	4	4	4				
27	311501-4174-00	SCREW	4	4	4				
28	311501-4211A	BEARING, ball (6001C$_3$)	1	1	1				
29	311501-4212-00	BEARING, needle	1	1	1				
30	311501-4231-00	SEAL, oil	2	2	2				
31	92075-2094	DAMPER	1	1	1				
32	311509-6680-03	PUMP, priming	1	1	1				
33	311509-6692-00	BRACKET	1	1	1				
34	311509-6100B	CARBURETOR ASSY	1	1	1				Fig. C-1
35	311509-6108-00	SPRING	1	1	1				
36	311509-6181-01	INSULATOR	1	1	1				
37	311509-6184-00	GASKET	2	2	2				
38	311509-6186-00	GASKET	1	1	1				
39	311509-6217B	SCREW	2	2	2				

KT12AD 31157DA (A)
KT12AD TZ022D-AA50,BA50,CA50(A,B,C)

Ref.No.	Part No.	Part Name	Quantity						Remarks
			A	B	C				
40	92015-2105	NUT (5mm)	2	2	2				
41	311509-6610-03	FUEL TANK ASSY	1	1	1				
42	311509-6641-00	•CAP, tank	1	1	1				
43	311409-6646B	•BREATHER	1	1	1				
44	311501-6732A	SCREW (5x20)	3	3	3				
45	311501-6741-00	COLLAR	3	3	3				
46	311501-6785-00	WASHER	6	6	6				
47	311501-6787-01	WASHER	6	6	6				
48	3115AA-6660D	STRAINER ASSY	1	1	1				
49	311509-6661-00	•ELEMENT	1	1	1				
50	311509-6669-00	•WEIGHT, tank	1	1	1				
51	3115AA-6662B	•STRAINER, fuel	1	1	1				
52	311501-6816C	•PIPE, strainer	1	1	1				
53	311501-6814-00	•CLAMP	1	1	1				
54	311501-6667-05	CAP, tank	1	1	1				
55	311509-6817-00	TUBE	1	1	1				
56	311501-8511-04	SWITCH, stop	1	1	1				
57	311565-1611A	CASE, spiral	1	1	1				
58	214B0416A	SCREW (4x16)	4	4	4				
59	311509-1632-00	COVER, cylinder	1	1	1				
60	311501-1628-01	GASKET	1	1	1				
61	214B0410A	SCREW (4x10)	1	1	1				
62	311509-1633B	COVER, cylinder	1	1	1				
63	214B0406A	SCREW (4x6)	2	2	2				
64	311509-1634-00	COVER, cylinder	1	1	1				
65	311551-3540A	CLUTCH ASSY		1					
	13081-2090	CLUTCH ASSY			1				
66	311550-3544B	•PIN, clutch		2	2				
67	311509-3551-00	•HOLDER, clutch		1	1				
68	311551-3552A	•SHOE, clutch		2					
	49049-2070	•SHOE, clutch			2				
69	311550-3554B	•SPRING, clutch		1					
	92144-2018	•SPRING, clutch			1				
70	311550-3595C	•WASHER		2	2				
71	311509-3595-00	•WASHER		1	1				
72	214B0612	•SCREW (6x12)		1	1				
73	461F0600A	•WASHER, spring		1	1				
74	311550-4146A	CASE, attachment		1	1				
75	214B0516A	SCREW (5x16)		4	4				
76	311560-8111A	FLYWHEEL	1	1	1				
77	311501-8102-00	COVER, breaker	1	1	1				
78	311501-8436-00	CONDENCER	1	1	1				

KT12AD 31157DA (A)
KT12AD TZ022D-AA50,BA50,CA50(A,B,C)

Ref.No.	Part No.	Part Name	Quantity						Remarks
			A	B	C				
79	311501-8440-00	BREAKER, contact	1	1	1				
80	311501-8451-00	FELT, cam	1	1	1				
81	311503-8123-00	COIL, ignition	1	1	1				
82	311503-8164-00	GROMMET	1	1	1				
83	233B0408	SCREW (4x8)	2	2	2				
84	311510-8127A	SCREW	2	2	2				
85	234B0410	SCREW (4x10)	1	1	1				
86	214B0408	SCREW (4x8)	2	2	2				
87	311501-8161-03	CLAMP	1	1	1				
88	311501-8173-00	GASKET	1	1	1				
89	311501-8162-00	CLAMP	1	1	1				
90	315B0800	NUT (8mm)	1	1	1				
91	311501-3482-00	WASHER	1	1	1				
92	311501-3483-00	WASHER	1	1	1				
93	510A3100	KEY	1	1	1				
94	311509-8410A	PLUG, spark (NGK BM6)	1	1	1				
95	3119AA-8418D	CAP, plug	1	1	1				
96	311509-8419B	SPRING	1	1	1				
97	49088-2253-9T	RECOIL STARTER ASSY	1	1	1				Fig. R-1
98	214B0410A	SCREW (4x10)	4	4	4				
99	3114AB-0813A	LABEL, mark	1	1	1				★★
100	31153K-0813A	LABEL, horse power	1	1	1				★★
101	56031-2243	LABEL	1	1	1				★★
102	31157D-0822A	LABEL	1	1	1				★★

Fig. A-1 AIR CLEANER

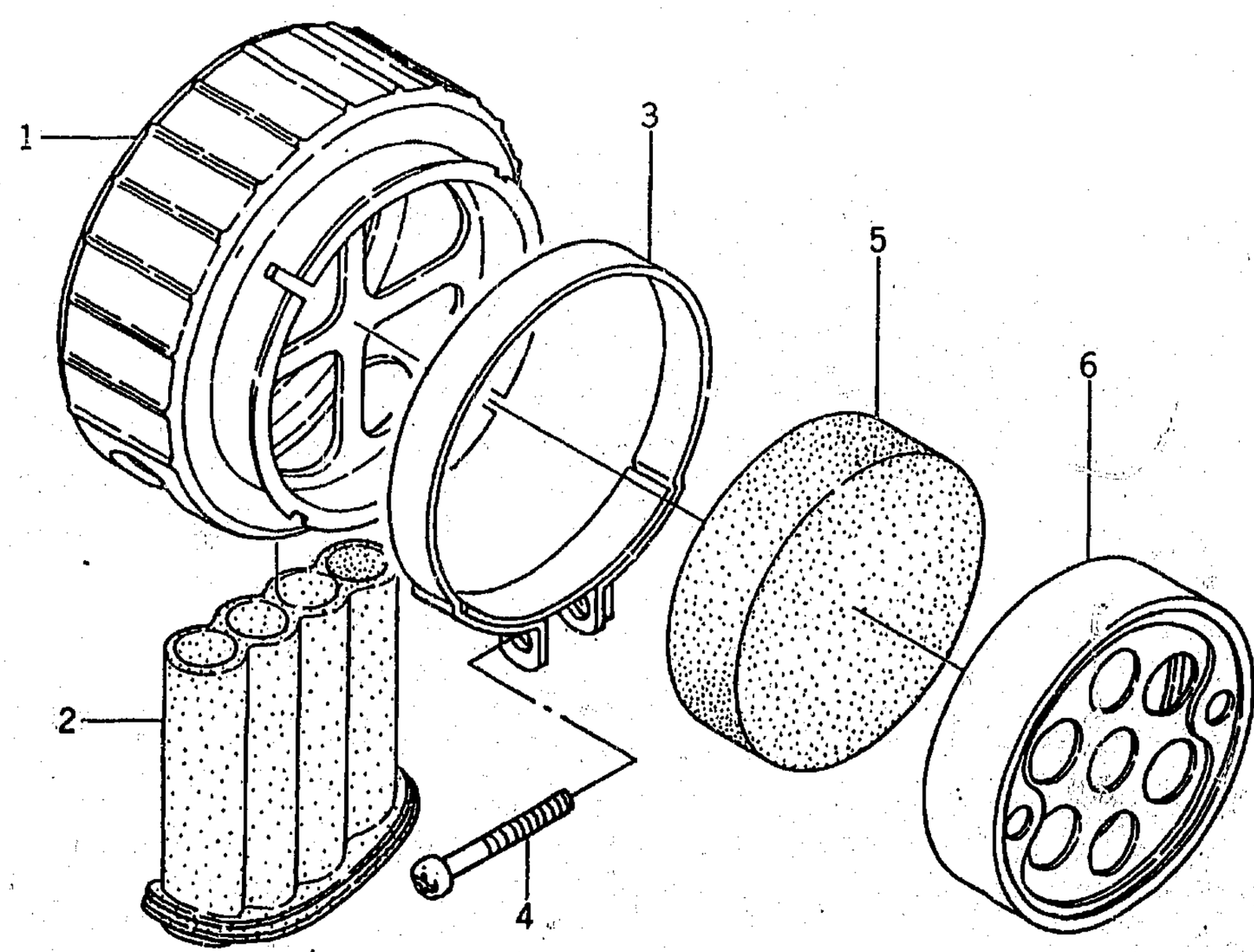

Ref.No.	Part No.	Part Name	Quantity						Remarks
			A	B	C				
	311509-1310-02	AIR CLEANER ASSY	1	1	1				
A-1- 1	311509-1316-01	•CAP, air cleaner	1	1	1				
A-1- 2	311509-1329-00	•DUCT, air	1	1	1				
A-1- 3	31153P-1315A	•BAND	1	1	1				
A-1- 4	220B0425	••SCREW (4x25)	1	1	1				
A-1- 5	311509-1312-00	•ELEMENT	1	1	1				
A-1- 6	311509-1311-01	•CASE, air cleaner	1	1	1				

Fig. C-1 CARBURETOR

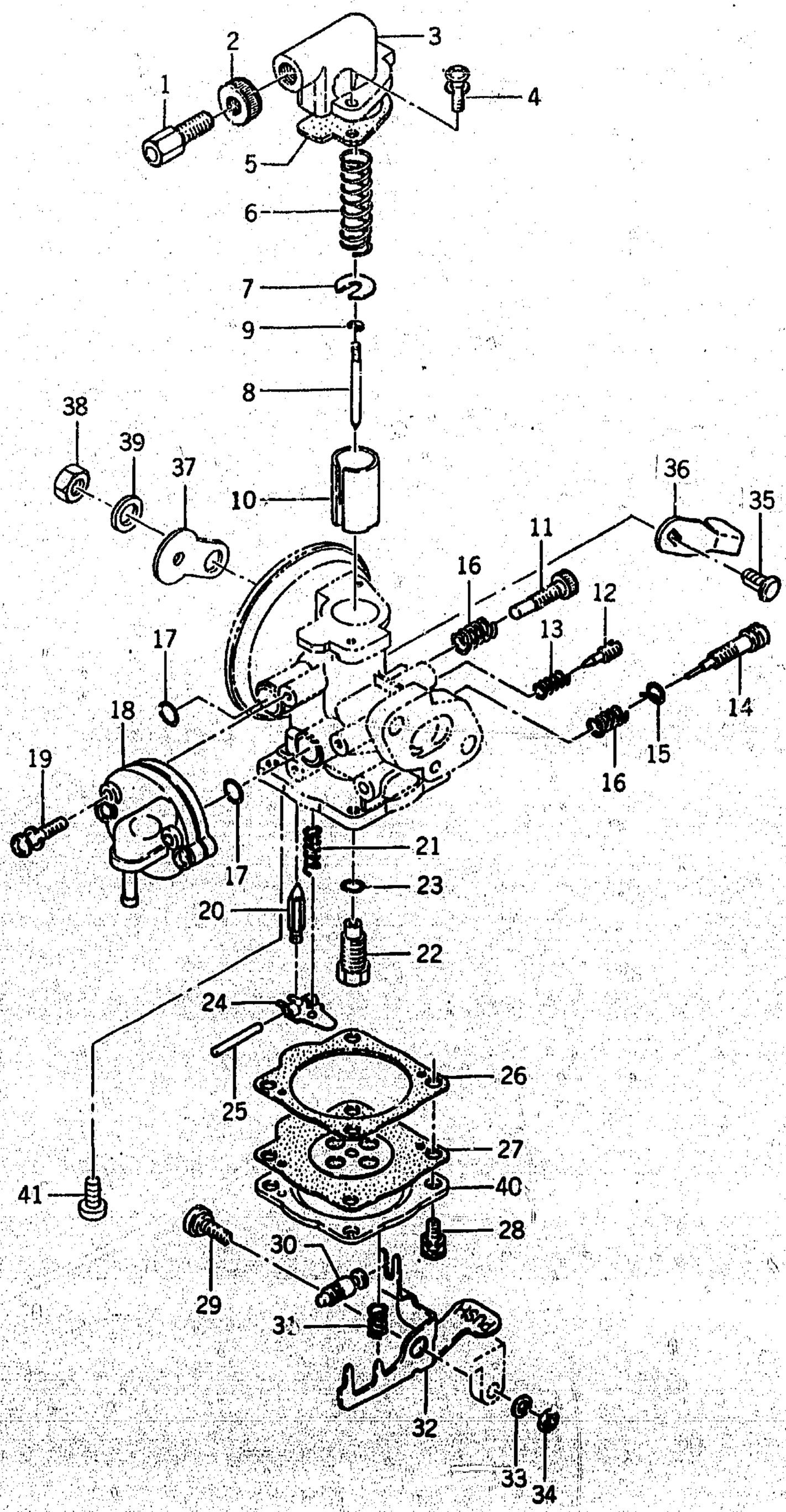

Fig. C-1 CARBURETOR

Ref.No.	Part No.	Part Name	Quantity						Remarks
			A	B	C				
	311509-6100B	CARBURETOR ASSY	1	1	1				
C-1- 1	311509-6140A	•ADJUSTER, cable	1	1	1				
C-1- 2	311220-6117-00	•NUT, lock	1	1	1				
C-1- 3	311509-6105-00	•BODY TOP ASSY	1	1	1				
C-1- 4	311509-6156-00	•SCREW	2	2	2				
C-1- 5	311509-6172-00	•GASKET	1	1	1				
C-1- 6	311509-6103-00	•SPRING, valve	1	1	1				
C-1- 7	311502-6145-00	•RETAINER, valve	1	1	1				
C-1- 8	311509-6106B	•NEEDLE, jet	1	1	1				
C-1- 9	311220-6134-00	••CLIP, needle	1	1	1				
C-1-10	311509-6101B	•VALVE, throttle	1	1	1				
C-1-11	311509-6114-00	•SCREW, slow stop	1	1	1				
C-1-12	311509-6115-00	•SCREW, adjuster	1	1	1				
C-1-13	311509-6117-00	•SPRING	1	1	1				
C-1-14	311509-6112-00	•SCREW, adjuster	1	1	1				
C-1-15	311509-6177-00	••O-RING	1	1	1				
C-1-16	311509-6116-00	•SPRING	2	2	2				
C-1-17	311509-6173-00	•GASKET, check valve	2	2	2				
C-1-18	311509-6161-00	•FUEL PUMP ASSY	1	1	1				
C-1-19	311509-6163-00	•SCREW	3	3	3				
C-1-20	311509-6122-00	•VALVE, needle	1	1	1				
C-1-21	311509-6124-00	•SPRING, valve	1	1	1				
C-1-22	311509-6129B	•NEEDLE JET ASSY	1	1	1				
C-1-23	311120-6119-00	••GASKET	1	1	1				
C-1-24	311509-6178-00	•LEVER, control	1	1	1				
C-1-25	311509-6127-00	•PIN, float	1	1	1				
C-1-26	311509-6171-00	•GASKET, diaphragm	1	1	1				
C-1-27	311509-6160-00	•DIAPHRAGM ASSY	1	1	1				
C-1-28	311509-6157-00	•SCREW	4	4	4				
C-1-29	311509-6137-00	•SCREW	1	1	1				
C-1-30	311509-6175-00	•VALVE, breather	1	1	1				
C-1-31	311509-6111-00	•SPRING, tickler	1	1	1				
C-1-32	311509-6107-00	•LEVER, tickler	1	1	1				
C-1-33	410B0400	•WASHER	1	1	1				
C-1-34	311B0400A	•NUT (4mm)	1	1	1				
C-1-35	311220-6153-00	•BOLT	1	1	1				
C-1-36	311220-6142-05	•LEVER, choke	1	1	1				
C-1-37	31151B-6102A	•VALVE, choke	1	1	1				
C-1-38	311120-6146-00	•NUT	1	1	1				
C-1-39	311543-6147-00	•WASHER, spring	1	1	1				
C-1-40	311509-6165A	•COVER	1	1	1				
C-1-41	311509-6153-00	•SCREW	1	1	1				

Fig. R-1 RECOIL STARTER

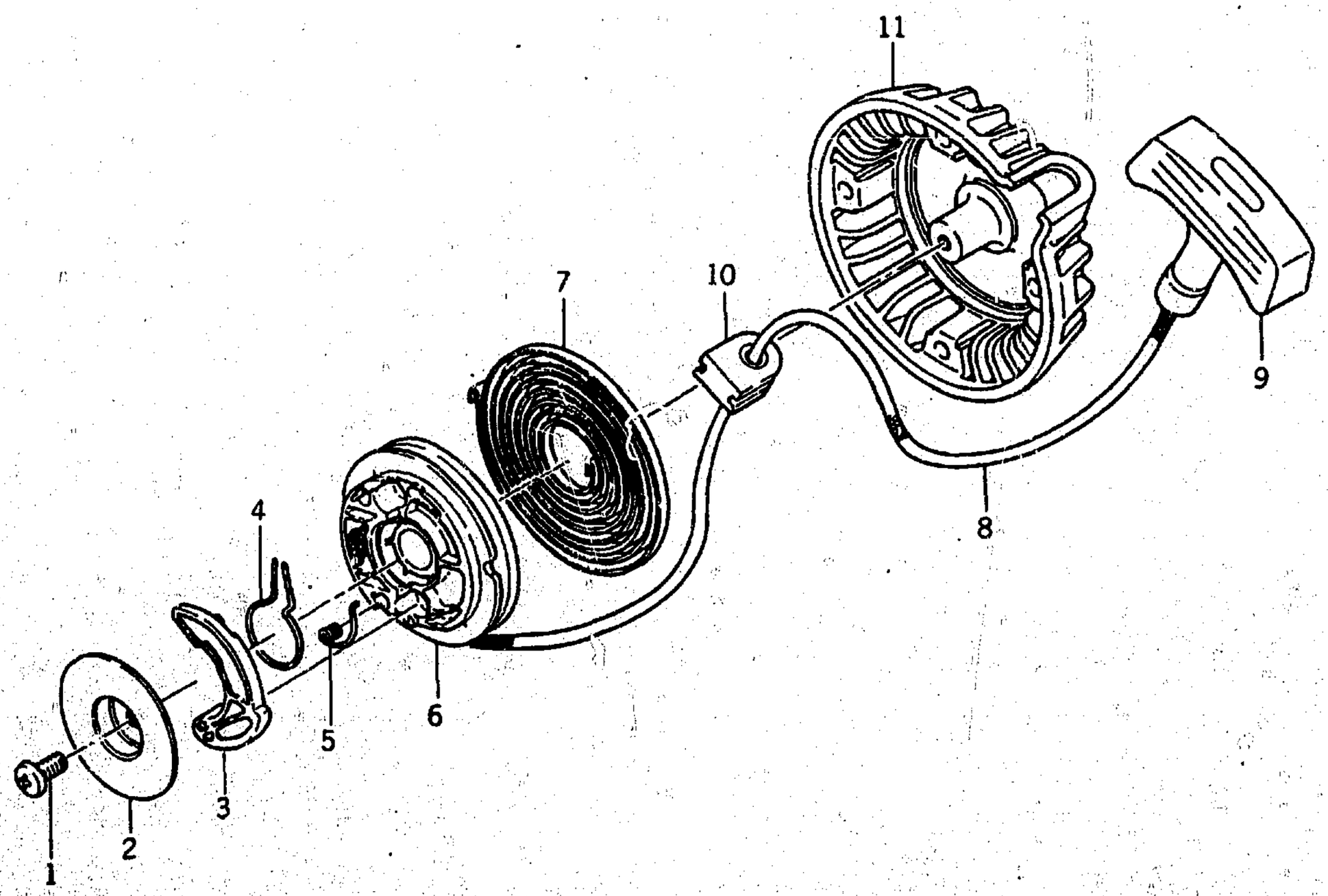

Ref.No.	Part No.	Part Name	Quantity A	Quantity B	Quantity C				Remarks
	49088-2253-9T	RECOIL STARTER ASSY	1	1	1				
R-1- 1	311400-3447-00	•SCREW	1	1	1				
R-1- 2	311560-3449A	•RETAINER	1	1	1				
R-1- 3	311400-3445-00	•PAWL, recoil	1	1	1				
R-1- 4	311400-3446-00	•SPRING	1	1	1				
R-1- 5	311400-3444B	•SPRING, return	1	1	1				
R-1- 6	311901-3441B	•REEL, recoil	1	1	1				
R-1- 7	311901-3452A	•SPRING, spiral	1	1	1				
R-1- 8	311901-3453B	•ROPE (3.5x890)	1	1	1				
R-1- 9	311560-3454A	•HANDLE, recoil starter	1	1	1				
R-1-10	311560-3435A	•GUIDE, rope	1	1	1				
R-1-11	32099-2089-9T	•CASE, recoil	1	1	1				