# B-03 CYLINDER/CRANKCASE

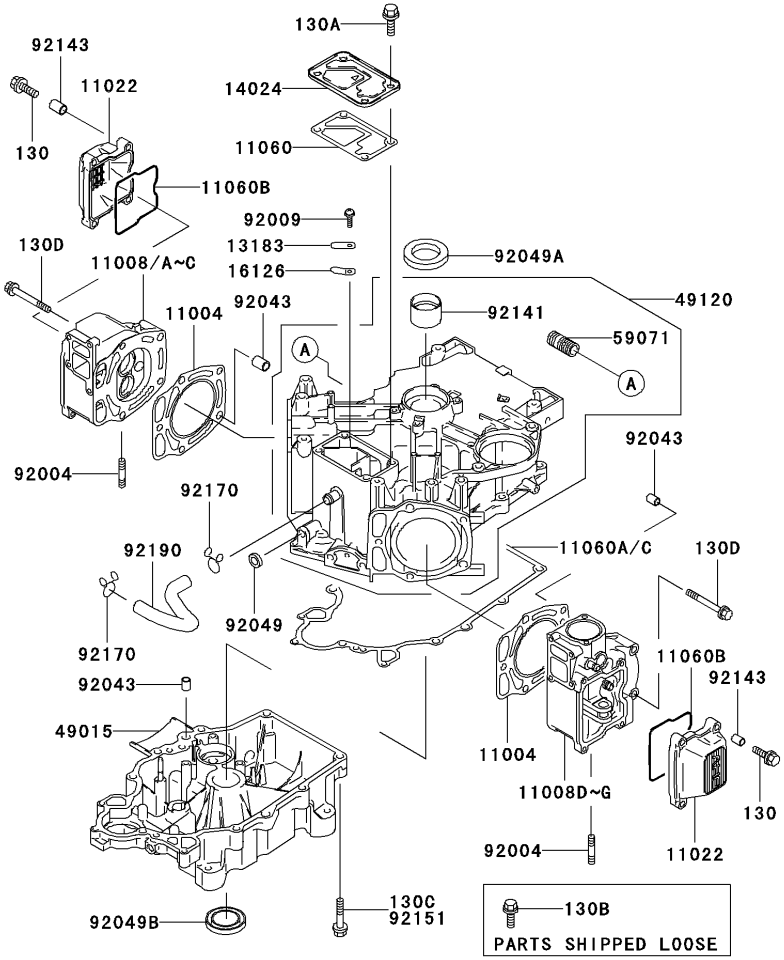


| Ref No. | Part No. | Part Name | Qty A | B | C | D |
|---|---|---|---|---|---|---|
| 130 | 130B0625 | BOLT-FLANGED | 8 | 8 | 8 | 8 |
| 130A | 130B0816 | BOLT-FLANGED | 4 | 4 | 4 | 4 |
| 130B | 130G0825 | BOLT-FLANGED | 4 | 4 | 4 | 4 |
| 130C | 130G0845 | BOLT-FLANGED | 8 | | | |
| 130D | 130G0865 | BOLT-FLANGED | 10 | 10 | 10 | 10 |
| 11004 | 11004-2098 | GASKET-HEAD | 2 | 2 | 2 | 2 |
| 11008 | 11008-2066 | HEAD-COMP-CYLINDER | * | | | |
| | ( - | FD590-107917) | | | | |
| 11008A | 11008-2133 | HEAD-COMP-CYLINDER | | 1 | | |
| 11008B | 11008-2133 | HEAD-COMP-CYLINDER | 1 | | | |
| | ( FD590-107918 - | ) | | | | |
| 11008C | 11008-2152 | HEAD-COMP-CYLINDER | | | 1 | 1 |
| 11008D | 11008-6005 | HEAD-COMP-CYLINDER | * | | | |
| | ( - | FD590-107917) | | | | |
| 11008E | 11008-6035 | HEAD-COMP-CYLINDER | | 1 | | |
| 11008F | 11008-6035 | HEAD-COMP-CYLINDER | 1 | | | |
| | ( FD590-107918 - | ) | | | | |
| 11008G | 11008-6040 | HEAD-COMP-CYLINDER | | | 1 | 1 |
| 11022 | 11022-2056 | CASE-ROCKER | 2 | 2 | 2 | 2 |
| 11060 | 11060-2074 | GASKET | 1 | 1 | 1 | 1 |
| 11060A | 11060-2284 | GASKET,CRANKCASE COVER | 1 | | | |
| 11060B | 11060-2332 | GASKET,ROCKER CASE | 2 | 2 | 2 | 2 |
| 11060C | 11060-2449 | GASKET,CRANKCASE COVER | | 1 | 1 | 1 |
| 13183 | 13183-2120 | PLATE | 2 | 2 | 2 | 2 |
| 14024 | 14024-2109 | COVER | 1 | 1 | 1 | 1 |
| 16126 | 16126-2146 | VALVE | 2 | 2 | 2 | 2 |
| 49015 | 49015-6100 | COVER-CRANKCASE | 1 | 1 | 1 | 1 |
| 49120 | 49120-6070 | CRANKCASE-COMP | 1 | 1 | 1 | 1 |
| 59071 | 59071-2079 | JOINT | 1 | 1 | 1 | 1 |
| 92004 | 92004-2141 | STUD | 4 | 4 | 4 | 4 |
| 92009 | 92009-2308 | SCREW | 2 | 2 | 2 | 2 |
| 92043 | 92043-1037 | PIN | 6 | 6 | 6 | 6 |
| 92049 | 92049-2097 | SEAL-OIL | 1 | 1 | 1 | 1 |
| 92049A | 92049-2110 | SEAL-OIL | 1 | 1 | 1 | 1 |
| 92049B | 92049-2112 | SEAL-OIL | 1 | 1 | 1 | 1 |
| 92141 | 92141-2110 | BEARING-PLANE | 1 | 1 | 1 | 1 |
| 92143 | 92143-2010 | COLLAR | 8 | 8 | 8 | 8 |
| 92151 | 92151-2123 | BOLT,8X45 | | 8 | 8 | 8 |
| 92170 | 92170-2002 | CLAMP | 2 | 2 | 2 | 2 |
| 92190 | 92190-2145 | TUBE | 1 | 1 | 1 | 1 |

# B-04 PISTON/CRANKSHAFT

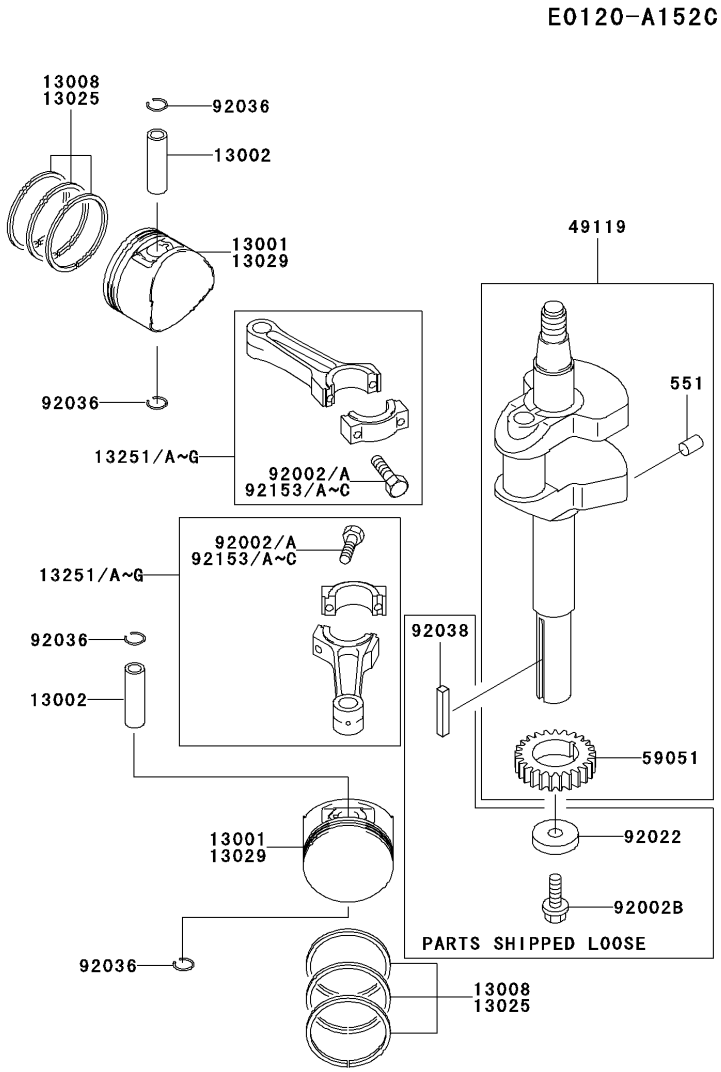


| Ref No. | Part No. | Part Name | Qty A | B | C | D |
|---|---|---|---|---|---|---|
| 551 | 551A0408 | PIN-DOWEL | 1 | 1 | 1 | 1 |
| 13001 | 13001-2123 | PISTON-ENGINE | 2 | 2 | 2 | 2 |
| 13002 | 13002-1013 | PIN-PISTON | 2 | 2 | 2 | 2 |
| 13008 | 13008-6016 | RING-SET-PISTON | 2 | 2 | 2 | 2 |
| 13025 | 13025-6002 | RING-SET-PISTON L,0.50 | AR | AR | AR | AR |
| 13029 | 13029-2091 | PISTON-ENGINE L,0.50 | AR | AR | AR | AR |
| 13251 | 13251-6022 | ROD-ASSY-CONNECTING | 2 | 2 | | |
| 13251A | 13251-6022 | ROD-ASSY-CONNECTING | | | * | |
| 13251B | 13251-6026 | ROD-ASSY-CONNECTING,U/S=0.50 | AR | AR | | |
| 13251C | 13251-6026 | ROD-ASSY-CONNECTING,U/S=0.50 | | | * | |
| 13251D | 13251-6068 | ROD-ASSY-CONNECTING | | | | 2 |
| 13251E | 13251-6068 | ROD-ASSY-CONNECTING | | | 2 | |
| 13251F | 13251-6069 | ROD-ASSY-CONNECTING,U/S=0.50 | | | | AR |
| 13251G | 13251-6069 | ROD-ASSY-CONNECTING,U/S=0.50 | | | AR | |
| 49119 | 49119-2130 | CRANKSHAFT-ASSY | 1 | 1 | 1 | 1 |
| 59051 | 59051-2112 | GEAR-SPUR | 1 | 1 | 1 | 1 |
| 92002 | 92002-2053 | BOLT | 4 | 4 | | |
| 92002A | 92002-2053 | BOLT | | | * | |
| 92002B | 92002-2263 | BOLT,10X28 | 1 | 1 | 1 | 1 |
| 92022 | 92022-2194 | WASHER | 1 | 1 | 1 | 1 |
| 92036 | 92036-021 | RING-SNAP | 4 | 4 | 4 | 4 |
| 92038 | 92038-2101 | KEY | 1 | 1 | 1 | 1 |
| 92153 | 92153-2054 | BOLT,7X35.2 | | | | AR |
| 92153A | 92153-2054 | BOLT,7X35.2 | | | AR | |
| 92153B | 92153-2054 | BOLT,7X35.2 | | | | 4 |
| 92153C | 92153-2054 | BOLT,7X35.2 | | | 4 | |

# B-05 VALVE/CAMSHAFT

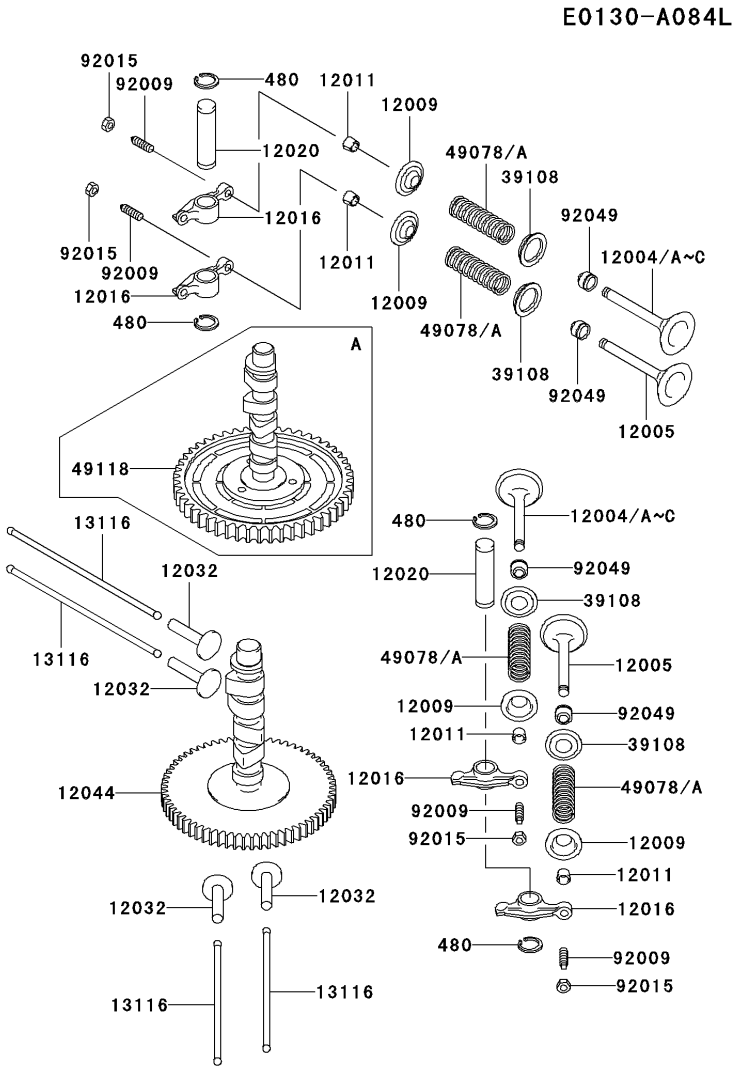


| Ref No. | Part No. | Part Name | Qty A | B | C | D |
|---|---|---|---|---|---|---|
| 480 | 480J1200 | CIRCLIP | 4 | 4 | 4 | 4 |
| 12004 | 12004-2106 | VALVE-INTAKE | 2 | 2 | | |
| 12004A | 12004-2106 | VALVE-INTAKE | | | * | |
| 12004B | 12004-2116 | VALVE-INTAKE | | | | 2 |
| 12004C | 12004-2116 | VALVE-INTAKE | | | 2 | |
| 12005 | 12005-2094 | VALVE-EXHAUST | 2 | 2 | 2 | 2 |
| 12009 | 12009-2067 | RETAINER-VALVE SPRING | 4 | 4 | 4 | 4 |
| 12011 | 12011-2056 | COLLET | 8 | 8 | 8 | 8 |
| 12016 | 12016-2056 | ARM-ROCKER | 4 | 4 | 4 | 4 |
| 12020 | 12020-2059 | SHAFT-ROCKER | 2 | 2 | 2 | 2 |
| 12032 | 12032-2064 | TAPPET | 4 | 4 | 4 | 4 |
| 12044 | 12044-2242 | CAMSHAFT-VALVE | | 1 | 1 | 1 |
| 13116 | 13116-2057 | ROD-PUSH | 4 | 4 | 4 | 4 |
| 39108 | 39108-2057 | RETAINER-SPRING | 4 | 4 | 4 | 4 |
| 49078 | 49078-2082 | SPRING-ENGINE VALVE | | 4 | 4 | 4 |
| 49078A | 49078-2083 | SPRING-ENGINE VALVE | 4 | | | |
| 49118 | 49118-2063 | CAMSHAFT-COMP | 1 | | | |
| 92009 | 92009-1109 | SCREW | 4 | 4 | 4 | 4 |
| 92015 | 92015-1137 | NUT | 4 | 4 | 4 | 4 |
| 92049 | 92049-2109 | SEAL-OIL | 4 | 4 | 4 | 4 |

B-06

# LUBRICATION-EQUIPMENT

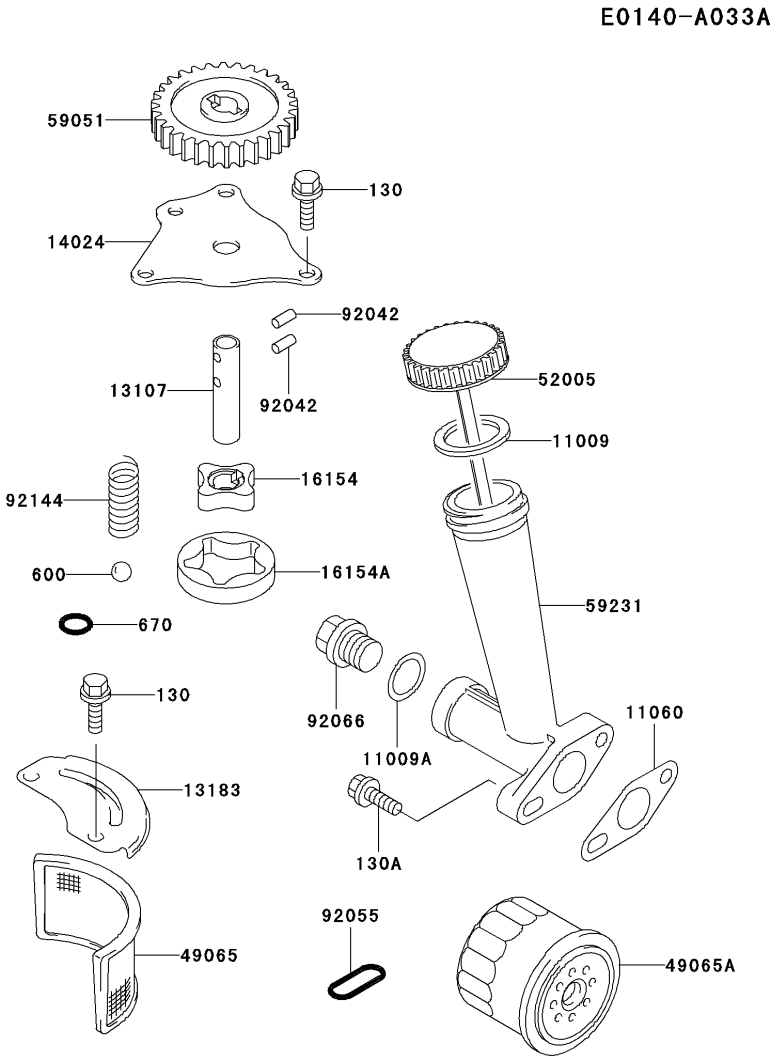


| Ref No. | Part No. | Part Name | Qty | A | B | C | D |
|---|---|---|---|---|---|---|---|
| 130 | 130B0614 | BOLT-FLANGED | | 5 | 5 | 5 | 5 |
| 130A | 130G0625 | BOLT-FLANGED | | 2 | 2 | 2 | 2 |
| 600 | 600A1300 | BALL-STEEL | | 1 | 1 | 1 | 1 |
| 670 | 670B2011 | O RING,11MM | | 1 | 1 | 1 | 1 |
| 11009 | 11009-2346 | GASKET,OIL GAUGE | | 1 | 1 | 1 | 1 |
| 11009A | 11009-2566 | GASKET,DRAIN PLUG | | 1 | 1 | 1 | 1 |
| 11060 | 11060-2083 | GASKET,FILLER | | 1 | 1 | 1 | 1 |
| 13107 | 13107-2099 | SHAFT,OIL PUMP | | 1 | 1 | 1 | 1 |
| 13183 | 13183-2121 | PLATE | | 1 | 1 | 1 | 1 |
| 14024 | 14024-2113 | COVER,OIL PUMP | | 1 | 1 | 1 | 1 |
| 16154 | 16154-2053 | ROTOR-PUMP,IN | | 1 | 1 | 1 | 1 |
| 16154A | 16154-2054 | ROTOR-PUMP,OUT | | 1 | 1 | 1 | 1 |
| 49065 | 49065-2058 | FILTER-OIL | | 1 | 1 | 1 | 1 |
| 49065A | 49065-2071 | FILTER-OIL | | 1 | 1 | 1 | 1 |
| 52005 | 52005-2079 | GAUGE,OIL | | 1 | 1 | 1 | 1 |
| 59051 | 59051-2114 | GEAR-SPUR | | 1 | 1 | 1 | 1 |
| 59231 | 59231-2080 | FILLER | | 1 | 1 | 1 | 1 |
| 92042 | 92042-014 | PIN | | 2 | 2 | 2 | 2 |
| 92055 | 92055-2086 | RING-O | | 1 | 1 | 1 | 1 |
| 92066 | 92066-2099 | PLUG,DRAIN | | 1 | 1 | 1 | 1 |
| 92144 | 92144-2053 | SPRING | | 1 | 1 | 1 | 1 |

# B-07 COOLING-EQUIPMENT

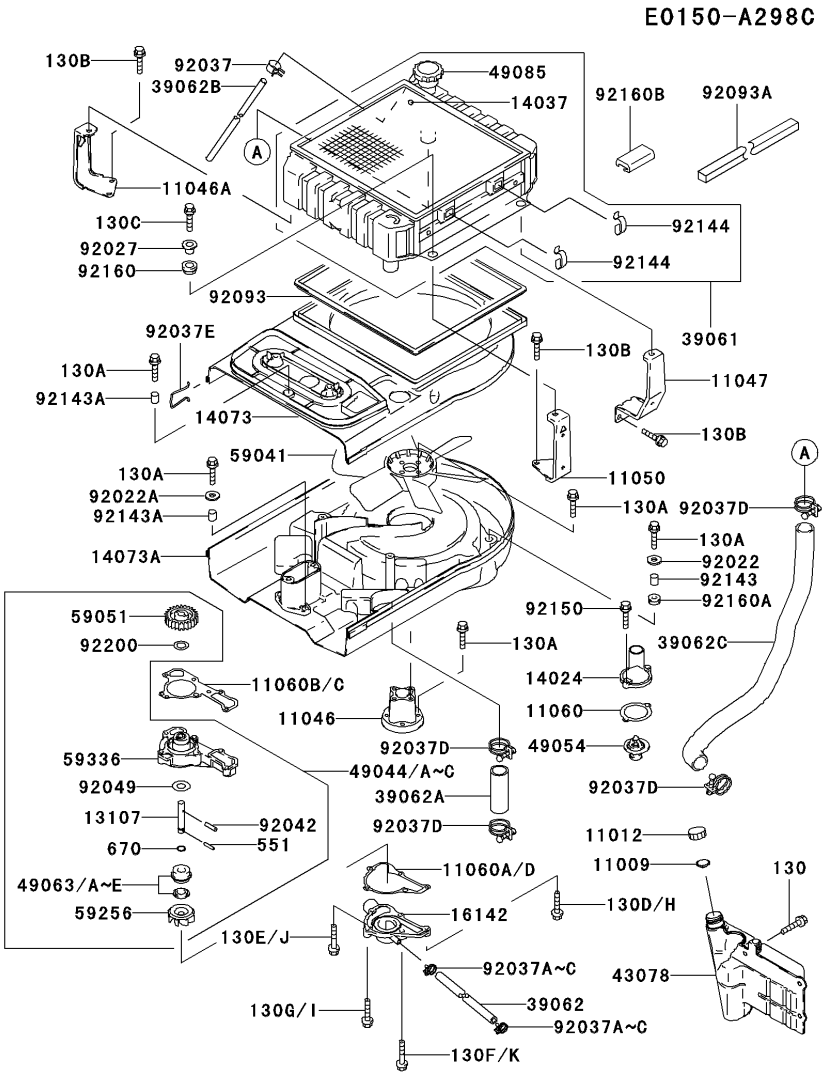


| Ref No. | Part No. | Part Name | Qty A | B | C | D |
|---|---|---|---|---|---|---|
| 11009 | 11009-1145 | GASKET | 1 | 1 | 1 | 1 |
| 11012 | 11012-1084 | CAP | 1 | 1 | 1 | 1 |
| 11046 | 11046-2008 | BRACKET | 1 | 1 | 1 | 1 |
| 11046A | 11046-2010-9H | BRACKET | 1 | 1 | 1 | 1 |
| 11047 | 11047-2058-9H | BRACKET | 2 | 2 | 2 | 2 |
| 11050 | 11050-2068-9H | BRACKET | 1 | 1 | 1 | 1 |
| 11060 | 11060-2084 | GASKET,THERMOSTAT COVER | 1 | 1 | 1 | 1 |
| 11060A | 11060-2288 | GASKET,PUMP COVER | 1 | | | |
| 11060B | 11060-2289 | GASKET,PUMP CASE | 1 | | | |
| 11060C | 11060-2450 | GASKET,PUMP CASE | | 1 | 1 | 1 |
| 11060D | 11060-2451 | GASKET,PUMP COVER | | 1 | 1 | 1 |
| 13107 | 13107-2097 | SHAFT,IMPELLER | 1 | 1 | 1 | 1 |
| 14024 | 14024-2114 | COVER | 1 | 1 | 1 | 1 |
| 14037 | 14037-2108 | SCREEN | 1 | 1 | 1 | 1 |
| 14073 | 14073-2067 | DUCT | 1 | 1 | 1 | 1 |
| 14073A | 14073-2068 | DUCT | 1 | 1 | 1 | 1 |
| 16142 | 16142-2069 | COVER-PUMP | 1 | 1 | 1 | 1 |
| 39061 | 39061-2058 | RADIATOR-ASSY | 1 | 1 | 1 | 1 |
| 39062 | 39062-2051 | HOSE-COOLING,7.5X13.5X305 | 1 | 1 | 1 | 1 |
| 39062A | 39062-2052 | HOSE-COOLING,24X31.2X90 | 1 | 1 | 1 | 1 |
| 39062B | 39062-2054 | HOSE-COOLING,7.5X10.5X460 | 1 | 1 | 1 | 1 |
| 39062C | 39062-2055 | HOSE-COOLING | 1 | 1 | 1 | 1 |
| 43078 | 43078-2051 | RESERVOIR | 1 | 1 | 1 | 1 |
| 49044 | 49044-2058 | PUMP-WATER | 1 | 1 | | |
| 49044A | 49044-2058 | PUMP-WATER | | | * | |
| 49044B | 49044-2066 | PUMP-WATER | | | | 1 |
| 49044C | 49044-2066 | PUMP-WATER | | | 1 | |
| 49054 | 49054-2053 | THERMOSTAT | 1 | 1 | 1 | 1 |
| 49063 | 49063-1054 | SEAL-MECHANICAL | | | * | |
| 49063A | 49063-1054 | SEAL-MECHANICAL | | 1 | | |
| 49063B | 49063-1056 | SEAL-MECHANICAL | | | | 1 |
| 49063C | 49063-1056 | SEAL-MECHANICAL | | | 1 | |
| 49063D | 49063-2056 | SEAL-MECHANICAL | 1 | | | |
| 49063E | 49063-2056 | SEAL-MECHANICAL | | * | | |
| 49085 | 49085-2052 | CAP-ASSY-PRESSURE | 1 | 1 | 1 | 1 |
| 59041 | 59041-2063 | FAN,COOLING | 1 | 1 | 1 | 1 |
| 59051 | 59051-2113 | GEAR-SPUR | 1 | 1 | 1 | 1 |
| 59256 | 59256-2057 | IMPELLER | 1 | 1 | 1 | 1 |
| 59336 | 59336-2052 | CASE-PUMP | 1 | 1 | 1 | 1 |
| 92022 | 92022-1557 | WASHER,6.5X20X1.6 | 4 | 4 | 4 | 4 |

# B-08 COOLING-EQUIPMENT

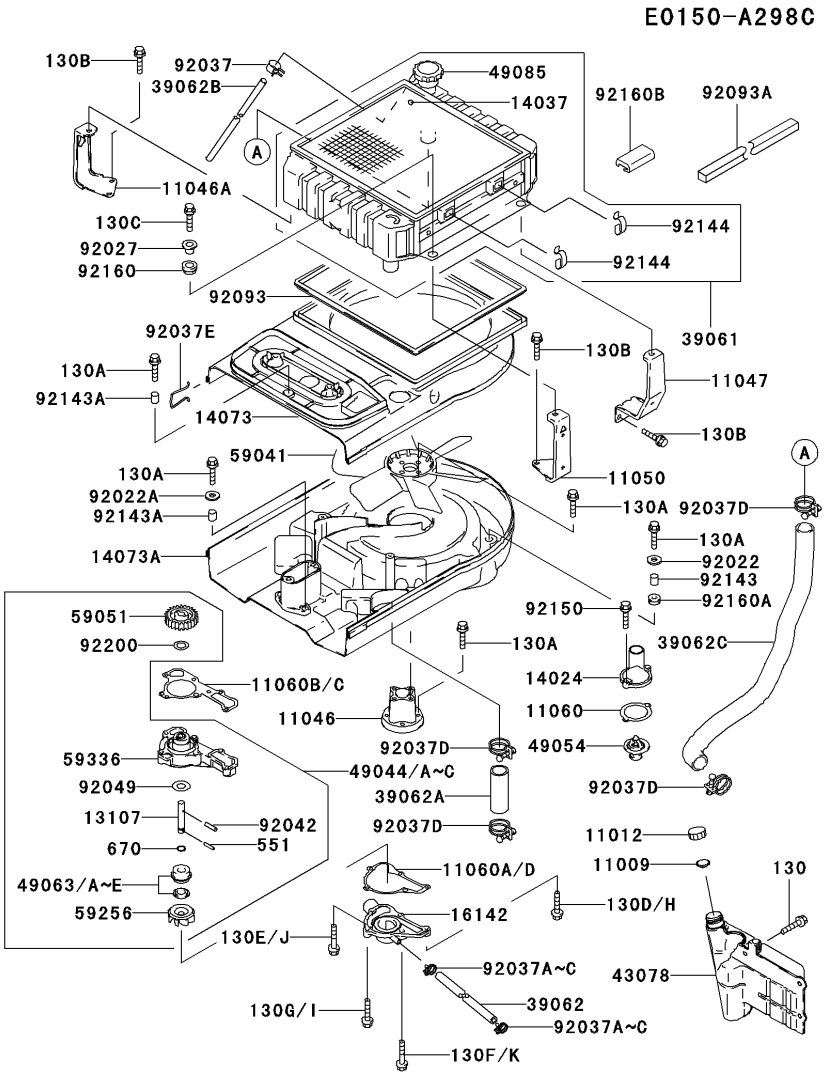


| Ref No. | Part No. | Part Name | Qty A | B | C | D |
|---|---|---|---|---|---|---|
| 130 | 130B0614 | BOLT-FLANGED | 3 | 3 | 3 | 3 |
| 130A | 130B0620 | BOLT-FLANGED | 16 | 16 | 16 | 16 |
| 130B | 130B0816 | BOLT-FLANGED | 8 | 8 | 8 | 8 |
| 130C | 130B0825 | BOLT-FLANGED | 4 | 4 | 4 | 4 |
| 130D | 130G0645 | BOLT-FLANGED | 3 | | | |
| 130E | 130G0675 | BOLT-FLANGED | 1 | | | |
| 130F | 130G0870 | BOLT-FLANGED | 1 | | | |
| 130G | 130H0665 | BOLT-FLANGED | 1 | | | |
| 130H | 130T0645 | BOLT-FLANGED | | 3 | 3 | 3 |
| 130I | 130T0665 | BOLT-FLANGED | | 1 | 1 | 1 |
| 130J | 130T0675 | BOLT-FLANGED | | 1 | 1 | 1 |
| 130K | 130T0870 | BOLT-FLANGED | | 1 | 1 | 1 |
| 551 | 551A0314 | PIN-DOWEL | 1 | 1 | 1 | 1 |
| 670 | 670B1507 | O RING | 1 | 1 | 1 | 1 |
| 92022A | 92022-2247 | WASHER | 2 | 2 | 2 | 2 |
| 92027 | 92027-271 | COLLAR | 4 | 4 | 4 | 4 |
| 92037 | 92037-2001 | CLAMP | 1 | 1 | 1 | 1 |
| 92037A | 92037-2065 | CLAMP | * | | | |
| 92037B | 92037-2082 | CLAMP | | 2 | 2 | 2 |
| 92037C | 92037-2082 | CLAMP | 2 | | | |
| 92037D | 92037-2210 | CLAMP | 4 | 4 | 4 | 4 |
| 92037E | 92037-2211 | CLAMP | 2 | 2 | 2 | 2 |
| 92042 | 92042-014 | PIN | 1 | 1 | 1 | 1 |
| 92049 | 92049-2111 | SEAL-OIL | 1 | 1 | 1 | 1 |
| 92093 | 92093-2085 | SEAL | 1 | 1 | 1 | 1 |
| 92093A | 92093-2111 | SEAL | 2 | 2 | 2 | 2 |
| 92143 | 92143-2013 | COLLAR | 4 | 4 | 4 | 4 |
| 92143A | 92143-2014 | COLLAR | 4 | 4 | 4 | 4 |
| 92144 | 92144-2346 | SPRING | 4 | 4 | 4 | 4 |
| 92150 | 92150-2231 | BOLT,6X20 | 2 | 2 | 2 | 2 |
| 92160 | 92160-2001 | DAMPER | 4 | 4 | 4 | 4 |
| 92160A | 92160-2002 | DAMPER | 4 | 4 | 4 | 4 |
| 92160B | 92160-2039 | DAMPER | 2 | 2 | 2 | 2 |
| 92200 | 92200-2044 | WASHER | 1 | 1 | 1 | 1 |

B-09

# ELECTRIC-EQUIPMENT

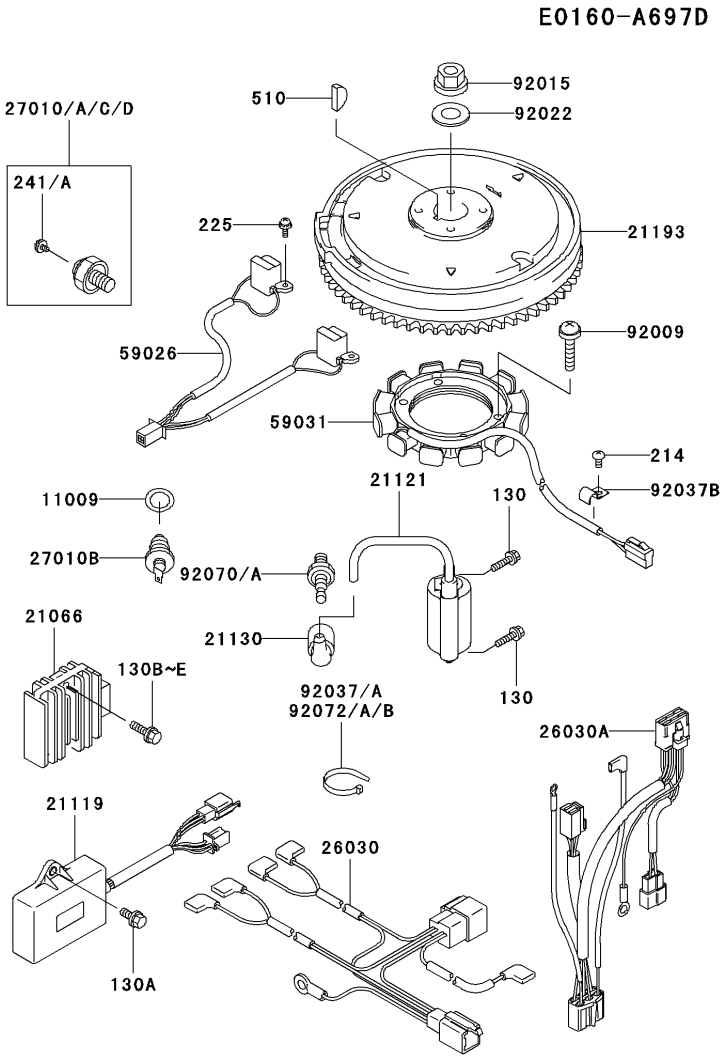


| Ref No. | Part No. | Part Name | Qty A | B | C | D |
|---|---|---|---|---|---|---|
| 130 | 130B0520 | BOLT-FLANGED | 4 | 4 | 4 | 4 |
| 130A | 130B0614 | BOLT-FLANGED | 2 | 2 | 2 | 2 |
| 130B | 130G0620 | BOLT-FLANGED | 2 | | | |
| 130C | 130G0620 | BOLT-FLANGED | | * | | |
| 130D | 130G0625 | BOLT-FLANGED | | | 2 | 2 |
| 130E | 130G0625 | BOLT-FLANGED | | 2 | | |
| 214 | 214B0510 | SCREW-PAN+- | 1 | 1 | 1 | 1 |
| 225 | 225B0414 | SCREW-PAN-WSP-CROS | 4 | 4 | 4 | 4 |
| 241 | 241B0406 | SCREW-PAN-WP+- | 1 | 1 | | |
| 241A | 241B0406 | SCREW-PAN-WP+- | | | * | |
| 510 | 510A5100 | KEY-WOODRUFF | 1 | 1 | 1 | 1 |
| 11009 | 11009-2766 | GASKET,16X24X1 | 1 | 1 | 1 | 1 |
| 21066 | 21066-2070 | REGULATOR-VOLTAGE | 1 | 1 | 1 | 1 |
| 21119 | 21119-2157 | IGNITER | 1 | 1 | 1 | 1 |
| 21121 | 21121-2083 | COIL-IGNITION | 2 | 2 | 2 | 2 |
| 21130 | 21130-2060 | CAP-SPARK PLUG | 2 | 2 | 2 | 2 |
| 21193 | 21193-2148 | FLYWHEEL-ASSY | 1 | 1 | 1 | 1 |
| 26030 | 26030-2246 | HARNESS | 1 | 1 | 1 | 1 |
| 26030A | 26030-2251 | HARNESS | 1 | 1 | 1 | 1 |
| 27010 | 27010-2170 | SWITCH | 1 | 1 | | |
| 27010A | 27010-2170 | SWITCH | | | * | |
| 27010B | 27010-2182 | SWITCH | 1 | 1 | 1 | 1 |
| 27010C | 27010-2234 | SWITCH | | | | 1 |
| 27010D | 27010-2234 | SWITCH | | | 1 | |
| 59026 | 59026-2054 | COIL-PULSING | 1 | 1 | 1 | 1 |
| 59031 | 59031-2122 | COIL-CHARGING | 1 | 1 | 1 | 1 |
| 92009 | 92009-2273 | SCREW | 4 | 4 | 4 | 4 |
| 92015 | 92015-2167 | NUT | 1 | 1 | 1 | 1 |
| 92022 | 92022-2245 | WASHER | 1 | 1 | 1 | 1 |
| 92037 | 92037-1173 | CLAMP | | | 4 | 4 |
| 92037A | 92037-1173 | CLAMP | | 4 | | |
| 92037B | 92037-2208 | CLAMP | 1 | 1 | 1 | 1 |
| 92070 | 92070-2060 | PLUG-SPARK,BMR6A(NGK),SOLID | 2 | 2 | | |
| 92070A | 92070-2112 | PLUG-SPARK,BPR4ES(NGK),SOLID | | | 2 | 2 |
| 92072 | 92072-1195 | BAND | 1 | 1 | 1 | 1 |
| 92072A | 92072-2003 | BAND | 4 | | | |
| 92072B | 92072-2003 | BAND | | * | | |

B-10

# CONTROL-EQUIPMENT

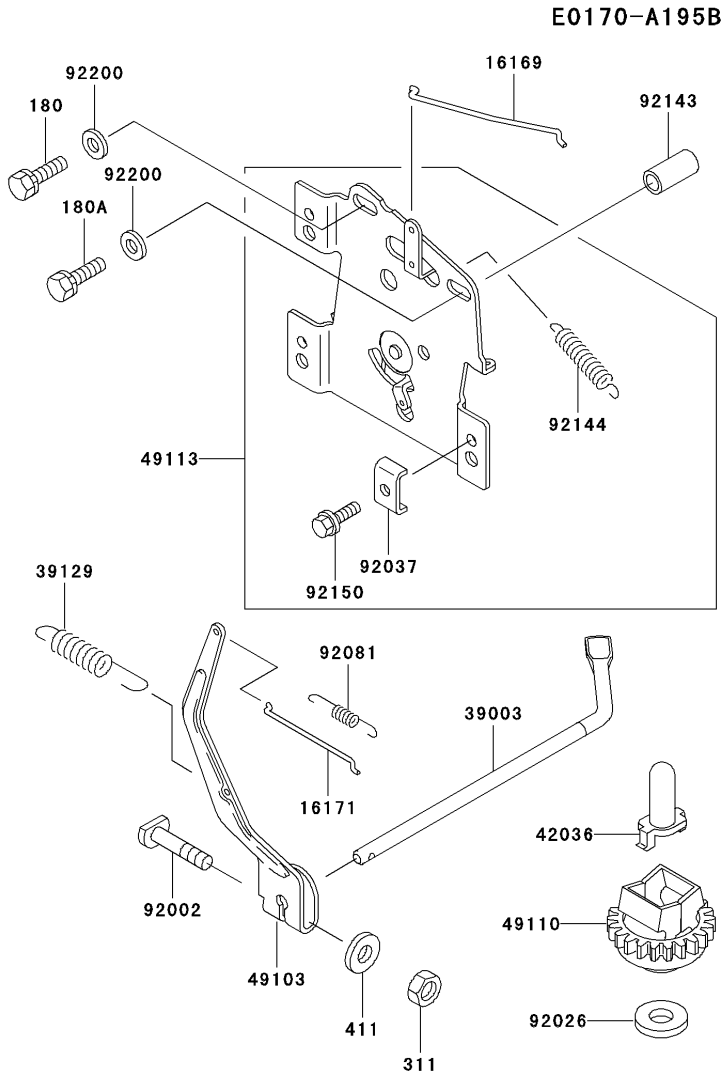


| Ref No. | Part No. | Part Name | Qty A | B | C | D |
|---|---|---|---|---|---|---|
| 180 | 180B0616 | BOLT-UPSET-WS | 1 | 1 | 1 | 1 |
| 180A | 180B0635 | BOLT-UPSET-WS | 1 | 1 | 1 | 1 |
| 311 | 311B0600 | NUT-HEX | 1 | 1 | 1 | 1 |
| 411 | 411B0600 | WASHER-PLAIN | 1 | 1 | 1 | 1 |
| 16169 | 16169-2121 | LINK-CHOKE | 1 | 1 | 1 | 1 |
| 16171 | 16171-2057 | LINK | 1 | 1 | 1 | 1 |
| 39003 | 39003-2064 | ARM-PIVOT | 1 | 1 | 1 | 1 |
| 39129 | 39129-2060 | SPRING-GOVERNOR | 1 | 1 | 1 | 1 |
| 42036 | 42036-2051 | SLEEVE | 1 | 1 | 1 | 1 |
| 49103 | 49103-2108 | ARM-GOVERNOR | 1 | 1 | 1 | 1 |
| 49110 | 49110-2073 | GOVERNOR-ASSY | 1 | 1 | 1 | 1 |
| 49113 | 49113-2153 | PANEL-COMP-CONTROL | 1 | 1 | 1 | 1 |
| 92002 | 92002-2269 | BOLT | 1 | 1 | 1 | 1 |
| 92026 | 92200-2036 | SPACER | 1 | 1 | 1 | 1 |
| 92037 | 92037-2209 | CLAMP | 2 | 2 | 2 | 2 |
| 92081 | 92081-2192 | SPRING | 1 | 1 | 1 | 1 |
| 92143 | 92143-2200 | COLLAR,6.8X10X20.5 | 1 | 1 | 1 | 1 |
| 92144 | 92144-2052 | SPRING | 1 | 1 | 1 | 1 |
| 92150 | 92150-2182 | BOLT,5X18 | 2 | 2 | 2 | 2 |
| 92200 | 92200-2070 | WASHER | 2 | 2 | 2 | 2 |

# B-11 CARBURETOR

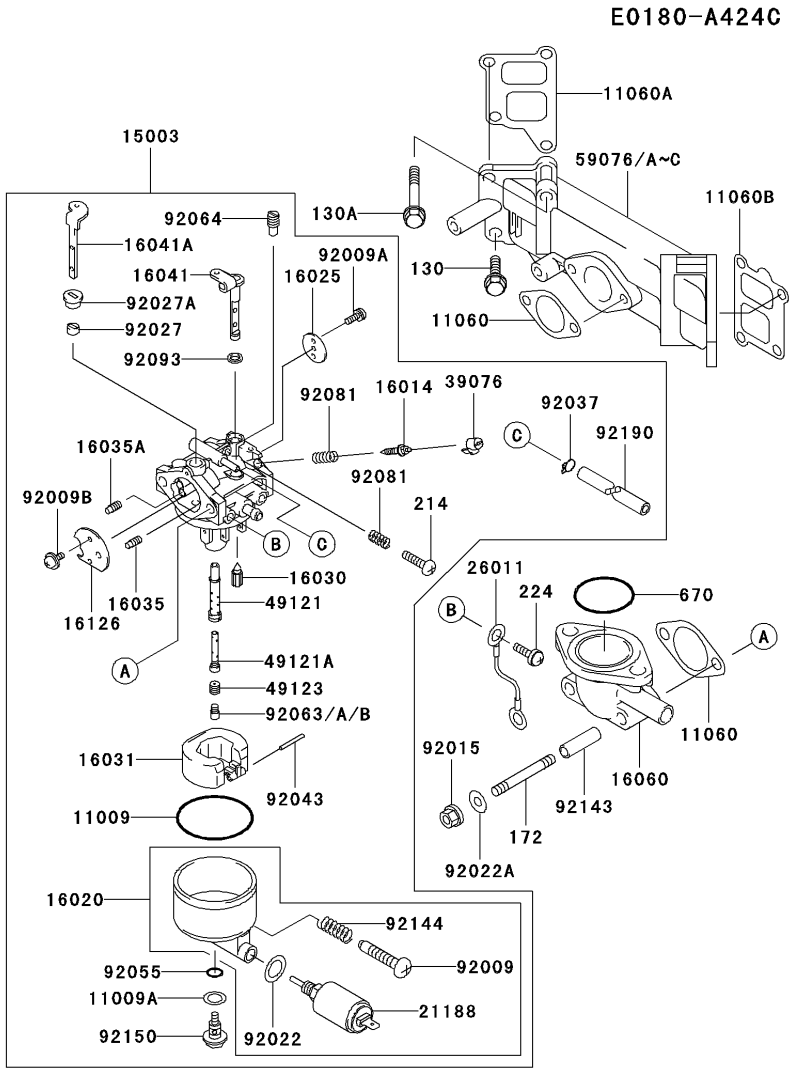


| Ref No. | Part No. | Part Name | Qty A | B | C | D |
|---|---|---|---|---|---|---|
| 11009 | 11009-2024 | GASKET | 1 | 1 | 1 | 1 |
| 11009A | 11009-2769 | GASKET | 1 | 1 | 1 | 1 |
| 11060 | 11060-2076 | GASKET,INTAKE PIPE | 2 | 2 | 2 | 2 |
| 11060A | 11060-2077 | GASKET | 1 | 1 | 1 | 1 |
| 11060B | 11060-2078 | GASKET | 1 | 1 | 1 | 1 |
| 15003 | 15003-2654 | CARBURETOR-ASSY | 1 | 1 | 1 | 1 |
| 16014 | 16014-2075 | SCREW-PILOT AIR | 1 | 1 | 1 | 1 |
| 16020 | 16020-2135 | CHAMBER-FLOAT | 1 | 1 | 1 | 1 |
| 16025 | 16025-2192 | VALVE-THROTTLE,#145 | 1 | 1 | 1 | 1 |
| 16030 | 16030-2076 | VALVE-FLOAT | 1 | 1 | 1 | 1 |
| 16031 | 16031-2065 | FLOAT | 1 | 1 | 1 | 1 |
| 16035 | 16035-2055 | JET-AIR,#1.0 | 1 | 1 | 1 | 1 |
| 16035A | 16035-2062 | JET-AIR,#1.3 | 1 | 1 | 1 | 1 |
| 16041 | 16041-2170 | SHAFT-CARBURETOR,THROTTL | 1 | 1 | 1 | 1 |
| 16041A | 16041-2171 | SHAFT-CARBURETOR,CHOKE | 1 | 1 | 1 | 1 |
| 16060 | 16060-2127 | PIPE-INTAKE | 1 | 1 | 1 | 1 |
| 16126 | 16126-2147 | VALVE,CHOKE | 1 | 1 | 1 | 1 |
| 21188 | 21188-2009 | SOLENOID | 1 | 1 | 1 | 1 |
| 26011 | 26011-2233 | WIRE-LEAD | 1 | 1 | 1 | 1 |
| 39076 | 39076-2053 | LIMITER | 1 | 1 | 1 | 1 |
| 49121 | 49121-2100 | NOZZLE-MAIN,#18A | 1 | 1 | 1 | 1 |
| 49121A | 49121-2101 | NOZZLE-MAIN,#18A | 1 | 1 | 1 | 1 |
| 49123 | 49123-2015 | HOLDER-MAIN JET | 1 | 1 | 1 | 1 |
| 59076 | 59076-2053 | MANIFOLD-INTAKE | * | | | |
| | ( - | FD590-108904) | | | | |
| 59076A | 59076-2064 | MANIFOLD-INTAKE | | 1 | | |
| 59076B | 59076-2064 | MANIFOLD-INTAKE | 1 | | | |
| | ( FD590-108905 - | ) | | | | |
| 59076C | 59076-2078 | MANIFOLD-INTAKE | | | 1 | 1 |
| 92009 | 92009-2025 | SCREW | 1 | 1 | 1 | 1 |
| 92009A | 92009-2080 | SCREW | 2 | 2 | 2 | 2 |
| 92009B | 92009-2081 | SCREW | 2 | 2 | 2 | 2 |
| 92015 | 92015-1193 | NUT | 2 | 2 | 2 | 2 |
| 92022 | 92022-2231 | WASHER | 1 | 1 | 1 | 1 |
| 92022A | 92022-2373 | WASHER,6.2X15X1.2 | 2 | 2 | 2 | 2 |
| 92027 | 92027-2003 | COLLAR | 1 | 1 | 1 | 1 |
| 92027A | 92027-2004 | COLLAR | 1 | 1 | 1 | 1 |
| 92037 | 92037-1043 | CLAMP | 1 | 1 | 1 | 1 |
| 92043 | 92043-2006 | PIN | 1 | 1 | 1 | 1 |
| 92055 | 92055-2148 | O RING | 1 | 1 | 1 | 1 |

# C-03 CARBURETOR

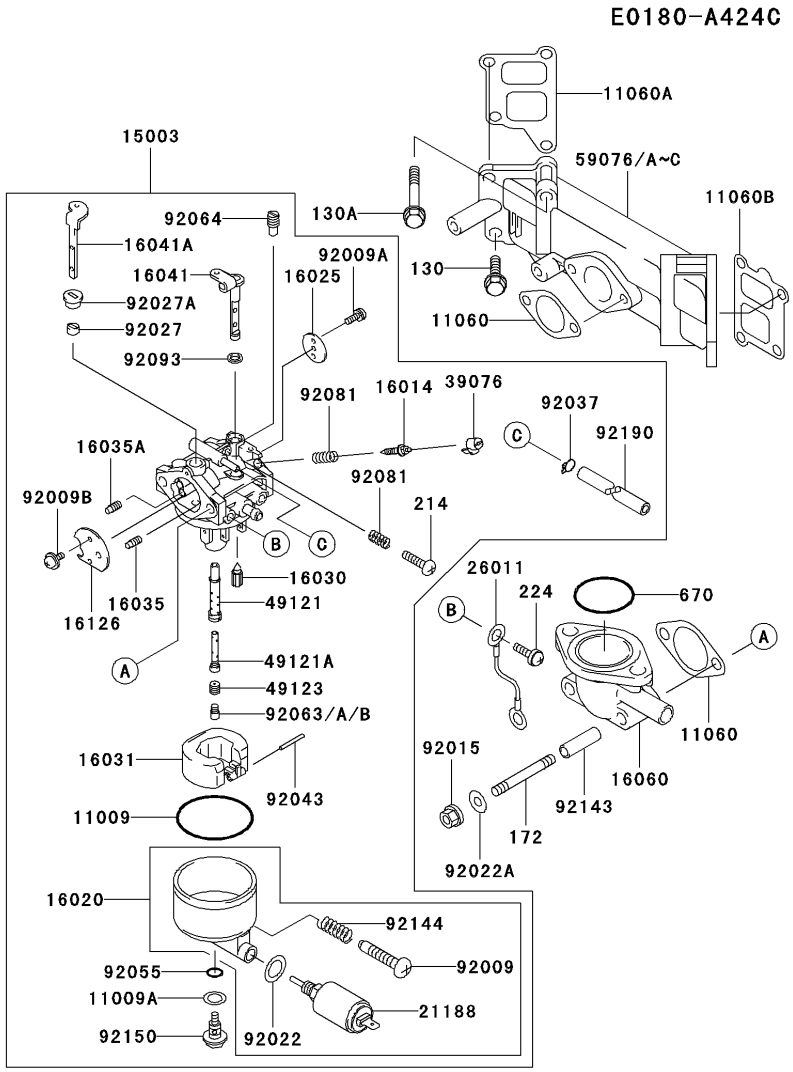


| Ref No. | Part No. | Part Name | Qty A | B | C | D |
|---|---|---|---|---|---|---|
| 130 | 130B0620 | BOLT-FLANGED | 5 | 5 | 5 | 5 |
| 130A | 130B0645 | BOLT-FLANGED | 3 | 3 | 3 | 3 |
| 172 | 172G0695 | BOLT-STUD,6X95 | 2 | 2 | 2 | 2 |
| 214 | 214B0414 | SCREW-PAN+- | 1 | 1 | 1 | 1 |
| 224 | 224B0508 | SCREW-PAN-WP-CROS | 1 | 1 | 1 | 1 |
| 670 | 670B3036 | O RING | 1 | 1 | 1 | 1 |
| 92063 | 92063-2267 | JET-MAIN,#110 | | | AR | AR |
| 92063A | 92063-2270 | JET-MAIN,#107.5 | | | AR | AR |
| 92063B | 92063-2305 | JET-MAIN,#112.5 | 1 | 1 | 1 | 1 |
| 92064 | 92064-2102 | JET-PILOT,#37.5 | 1 | 1 | 1 | 1 |
| 92081 | 92081-2009 | SPRING | 2 | 2 | 2 | 2 |
| 92093 | 92093-2002 | SEAL | 1 | 1 | 1 | 1 |
| 92143 | 92143-2011 | COLLAR | 2 | 2 | 2 | 2 |
| 92144 | 92144-2174 | SPRING | 1 | 1 | 1 | 1 |
| 92150 | 92150-2250 | BOLT | 1 | 1 | 1 | 1 |
| 92190 | 92190-2117 | TUBE | 1 | 1 | 1 | 1 |

# C-04 AIR-FILTER/MUFFLER

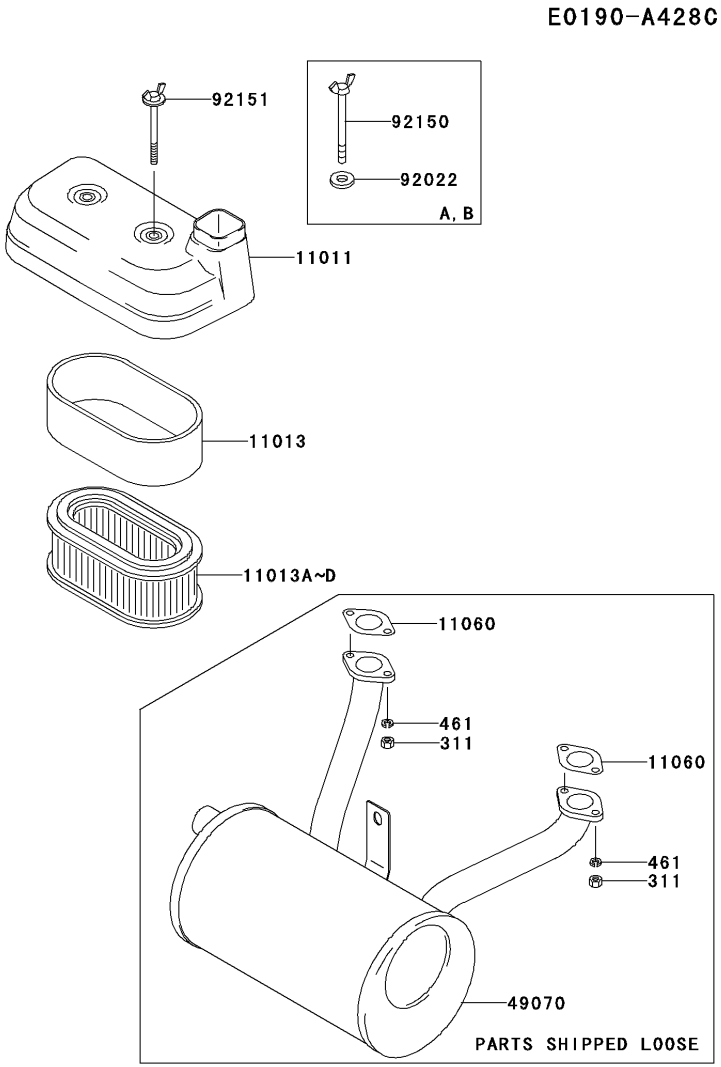


| Ref No. | Part No. | Part Name | Qty A | B | C | D |
|---|---|---|---|---|---|---|
| 311 | 311G0600 | NUT-HEX | 4 | 4 | 4 | 4 |
| 461 | 461F0600 | WASHER-SPRING | 4 | 4 | 4 | 4 |
| 11011 | 11011-2193 | CASE-AIR FILTER | 1 | 1 | 1 | 1 |
| 11013 | 11013-2114 | ELEMENT-AIR FILTER | 1 | 1 | 1 | 1 |
| 11013A | 11013-2115 | ELEMENT-AIR FILTER | 1 | 1 | | |
| 11013B | 11013-2115 | ELEMENT-AIR FILTER | | | * | |
| 11013C | 11013-2205 | ELEMENT-AIR FILTER | | | | 1 |
| 11013D | 11013-2205 | ELEMENT-AIR FILTER | | | 1 | |
| 11060 | 11060-2079 | GASKET,MUFFLRT | 2 | 2 | 2 | 2 |
| 49070 | 49070-2435-9Y | MUFFLER-COMP | 1 | 1 | 1 | 1 |
| 92022 | 92022-1545 | WASHER | 2 | 2 | | |
| 92150 | 92150-2004 | BOLT | 2 | 2 | | |
| 92151 | 92151-2155 | BOLT | | | 2 | 2 |

C-05

# FUEL-TANK/FUEL-VALVE

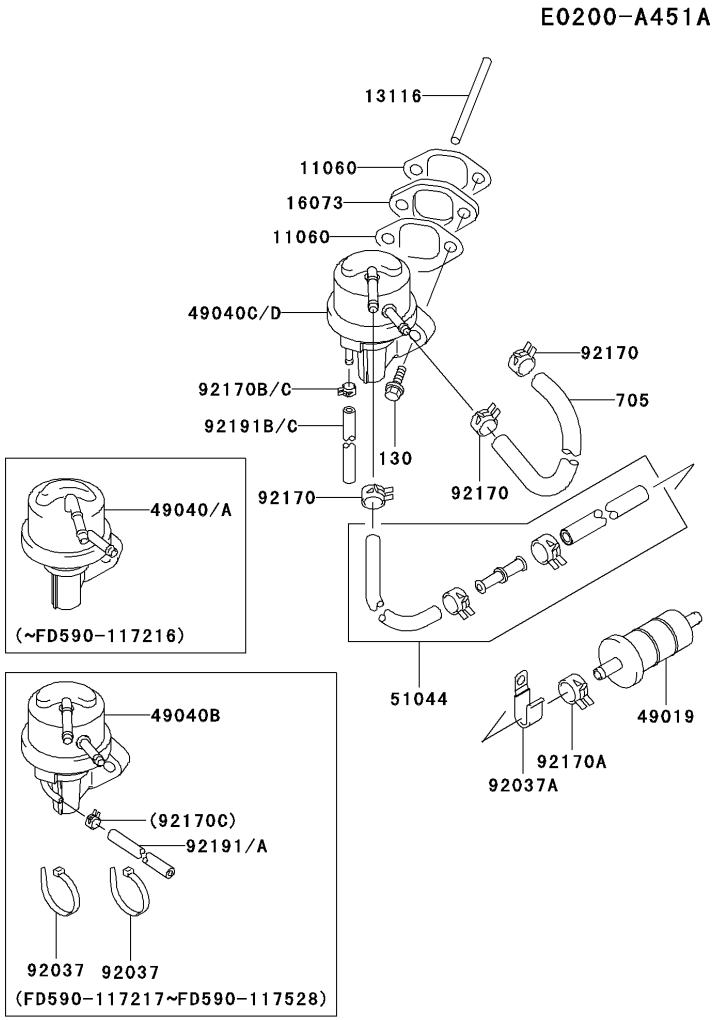


| Ref No. | Part No. | Part Name | Qty A | B | C | D |
|---|---|---|---|---|---|---|
| 130 | 130B0835 | BOLT-FLANGED | 2 | 2 | 2 | 2 |
| 705 | 705A061000 | TUBE-BRAID | 1 | 1 | 1 | 1 |
| 11060 | 11060-2075 | GASKET,FUEL PUMP | 2 | 2 | 2 | 2 |
| 13116 | 13116-2058 | ROD-PUSH | 1 | 1 | 1 | 1 |
| 16073 | 16073-2116 | INSULATOR | 1 | 1 | 1 | 1 |
| 49019 | 49019-1055 | FILTER-FUEL | 1 | 1 | 1 | 1 |
| 49040 | 49040-2061 | PUMP-FUEL | 1 | 1 | | |
| 49040A | 49040-2061 | PUMP-FUEL | | | 1 | |
| | ( - | FD590-117216) | | | | |
| 49040B | 49040-2081 | PUMP-FUEL | | | 1 | |
| | ( FD590-117217 - | FD590-117528) | | | | |
| 49040C | 49040-2082 | PUMP-FUEL | | | | 1 |
| 49040D | 49040-2082 | PUMP-FUEL | | | 1 | |
| | ( FD590-117529 - | ) | | | | |
| 51044 | 51044-2088 | TUBE-ASSY | 1 | 1 | 1 | 1 |
| 92037 | 92037-1173 | CLAMP | | | 2 | |
| | ( FD590-117217 - | FD590-117528) | | | | |
| 92037A | 92037-2081 | CLAMP | 1 | 1 | 1 | 1 |
| 92170 | 92170-2043 | CLAMP | 3 | 3 | 3 | 3 |
| 92170A | 92170-2082 | CLAMP | 1 | 1 | 1 | 1 |
| 92170B | 92170-2084 | CLAMP | | | | 1 |
| 92170C | 92170-2084 | CLAMP | | | 1 | |
| | ( FD590-117217 - | ) | | | | |
| 92191 | 92191-2161 | TUBE,4X8X750 | | | * | |
| | ( FD590-117217 - | ) | | | | |
| 92191A | 92191-2164 | TUBE,4X8X700 | | | 1 | |
| | ( - | FD590-117528) | | | | |
| 92191B | 92191-2166 | TUBE,4X8X330 | | | | 1 |
| 92191C | 92191-2166 | TUBE,4X8X330 | | | 1 | |
| | ( FD590-117529 - | ) | | | | |

# C-06 STARTER

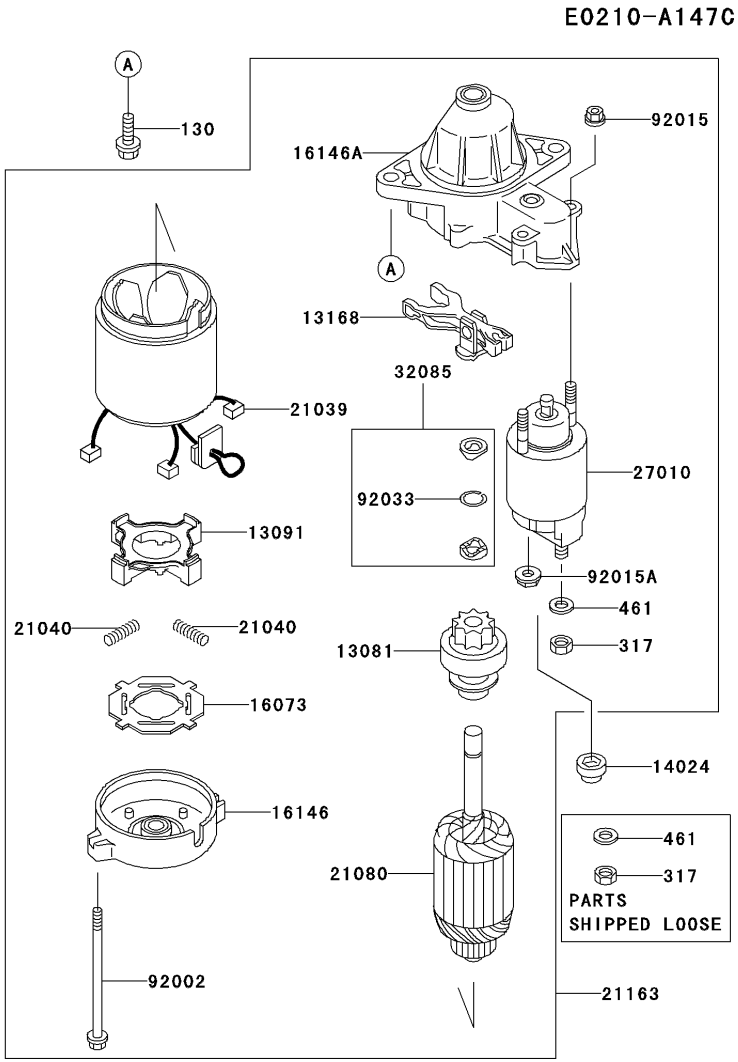


| Ref No. | Part No. | Part Name | Qty A | B | C | D |
|---|---|---|---|---|---|---|
| 130 | 130B0830 | BOLT-FLANGED | 2 | 2 | 2 | 2 |
| 317 | 317B0800 | NUT-HEX-SMALL | 2 | 2 | 2 | 2 |
| 461 | 461F0800 | WASHER-SPRING | 2 | 2 | 2 | 2 |
| 13081 | 13081-2108 | CLUTCH-ASSY | 1 | 1 | 1 | 1 |
| 13091 | 13091-2068 | HOLDER,BRUSH | 1 | 1 | 1 | 1 |
| 13168 | 13168-2131 | LEVER,SHIFT | 1 | 1 | 1 | 1 |
| 14024 | 14024-2205 | COVER | 1 | 1 | 1 | 1 |
| 16073 | 16073-2098 | INSULATOR | 1 | 1 | 1 | 1 |
| 16146 | 16146-2077 | COVER-ASSY | 1 | 1 | 1 | 1 |
| 16146A | 16146-2128 | COVER-ASSY | 1 | 1 | 1 | 1 |
| 21039 | 21039-2059 | BRUSH | 4 | 4 | 4 | 4 |
| 21040 | 21040-2052 | SPRING-BRUSH | 4 | 4 | 4 | 4 |
| 21080 | 21080-2054 | ARMATURE | 1 | 1 | 1 | 1 |
| 21163 | 21163-2077 | STARTER-ELECTRIC | 1 | 1 | 1 | 1 |
| 27010 | 27010-2122 | SWITCH | 1 | 1 | 1 | 1 |
| 32085 | 32085-2097 | STOPPER | 1 | 1 | 1 | 1 |
| 92002 | 92002-2277 | BOLT | 2 | 2 | 2 | 2 |
| 92015 | 92015-2146 | NUT | 2 | 2 | 2 | 2 |
| 92015A | 92015-2147 | NUT | 1 | 1 | 1 | 1 |
| 92033 | 92033-2081 | RING-SNAP | 1 | 1 | 1 | 1 |

# D-03 LABEL

F0290-A938A

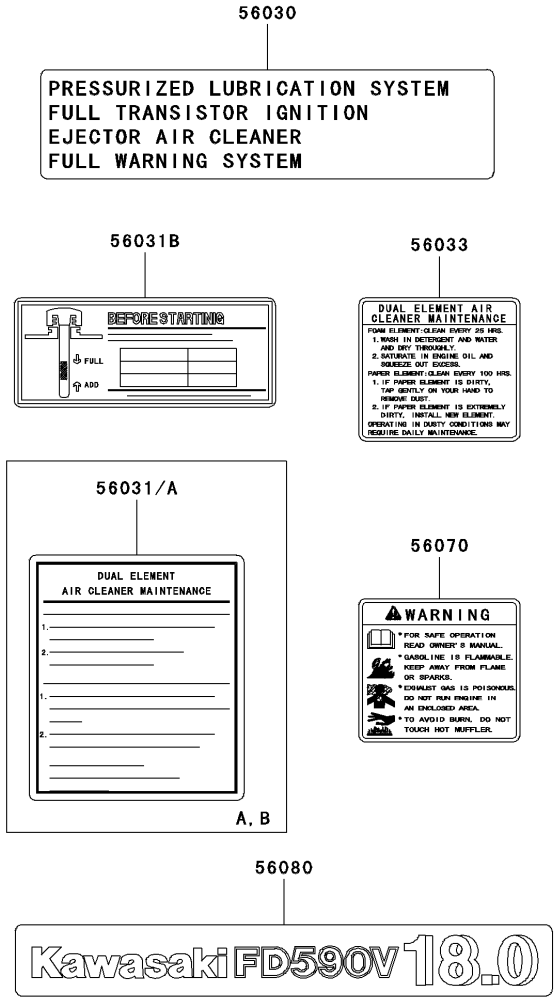


| Ref No. | Part No. | Part Name | Qty | A | B | C | D |
|---|---|---|---|---|---|---|---|
| 56030 | 56030-2314 | LABEL | | 1 | 1 | 1 | 1 |
| 56031 | 56031-2432 | LABEL-MANUAL | | 1 | | | |
| 56031A | 56031-2432 | LABEL-MANUAL | | | 1 | | |
| 56031B | 56031-2480 | LABEL-MANUAL | | 1 | 1 | 1 | 1 |
| 56033 | 56033-2081 | LABEL-MANUAL | | | | 1 | 1 |
| 56070 | 56070-2066 | LABEL-WARNING | | | | 1 | 1 |
| 56080 | 56080-2091 | LABEL-BRAND | | 1 | 1 | 1 | 1 |