PDFMAILER.DE winload.de - Das ultimative Downloadarchiv für Free- & Shareware. Über 5000 Programme, da findet jeder das, was er braucht!

Katalogtitel
FA210D- S23

Block-Nr.
B-11

Blocktitel.
AIR-FILTER/MUFFLER

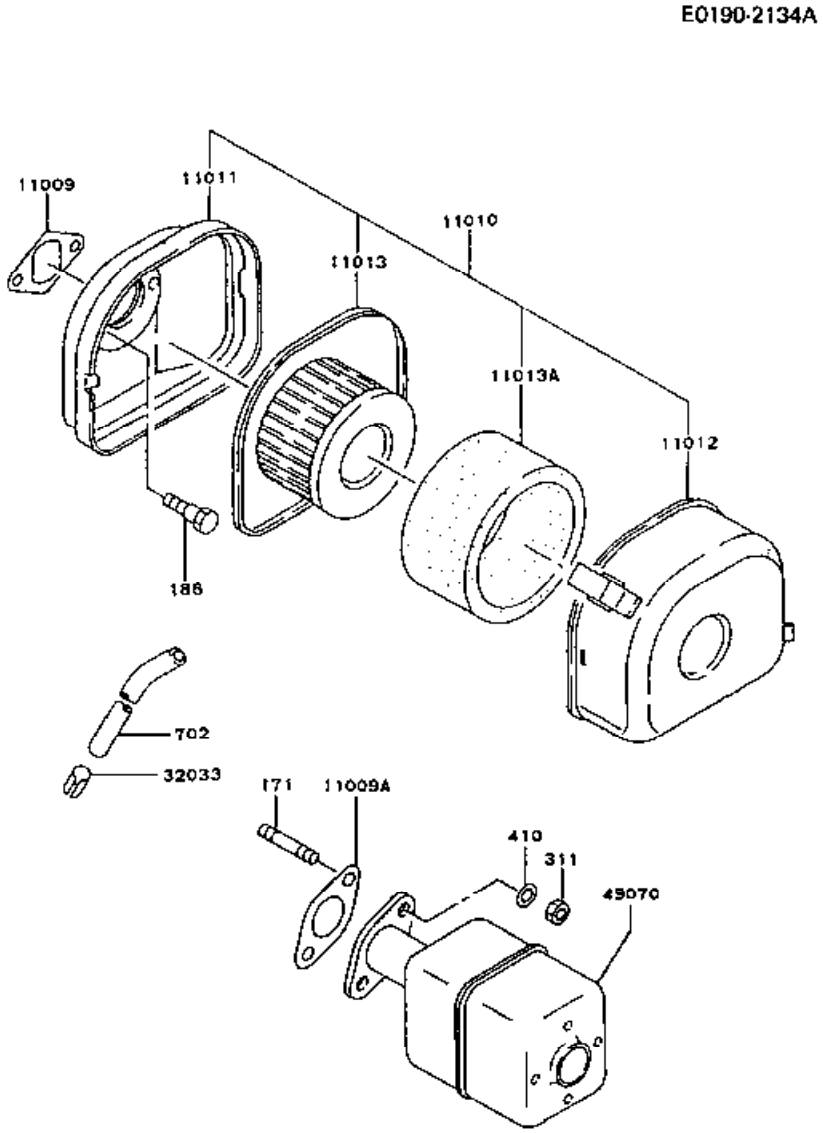

Ref.- Nr.	Teile-nr.	Beschreibung
171	171G0816	Bolt-stud
186	186G0665	Bolt-upset-wp
311	311B0800	Nut-hex
410	410B0800	W-plain-s
702	702A071000	Tube-rubber,l=165mm
11009	11009-2139	Gasket
11009a	11009-2163	Gasket
11010	11010-2367-9H	Filter-assy-air
11011	11011-2132-9H	Case-air Filter
11012	11012-2248	Cap,air Filter
11013	49064-2059	Element-air Filter
11013a	11013-2010	Element-air Filter
32033	32033-2001	Pipe
49070	49070-2095-9Y	Muffler-comp

Copyright © 2003 Kawasaki Engine & Powerproducts. Alle Rechte vorbehalten.

PDFMAILER.DE winload.de - Das ultimative Downloadarchiv für Free- & Shareware. Über 5000 Programme, da findet jeder das, was er braucht!

Katalogtitel
FA210D- S23

Block-Nr.
B-10

Blocktitel.
CARBURETOR

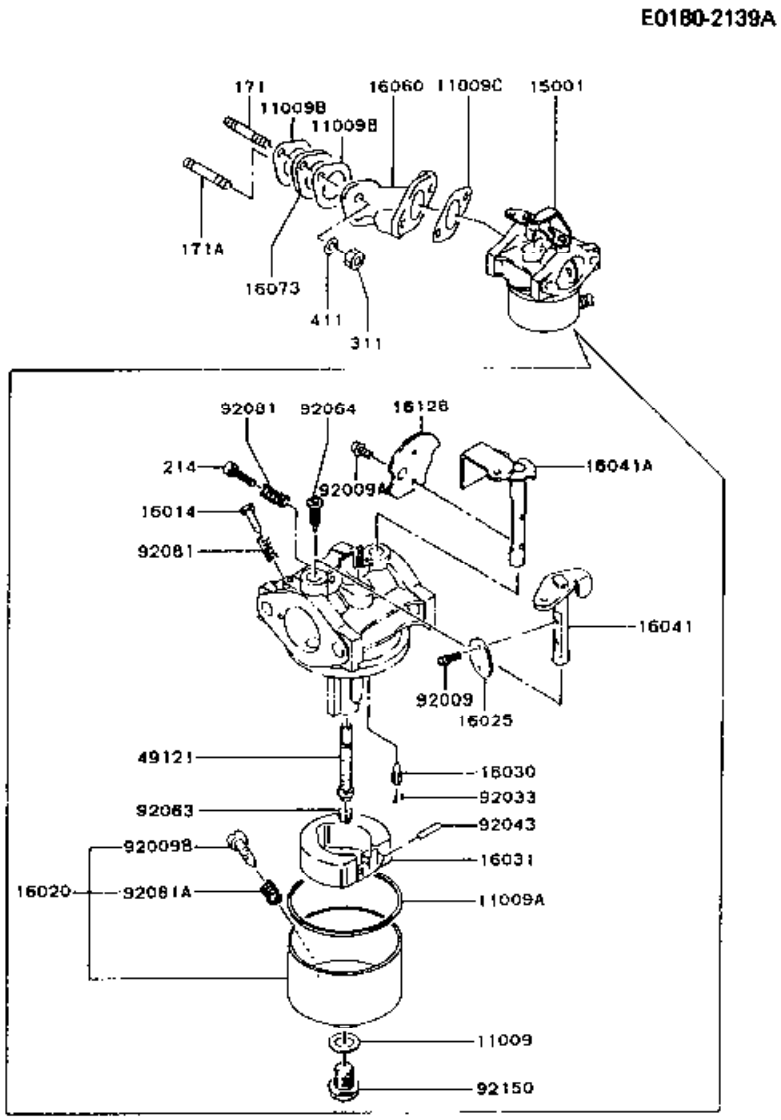

Ref.- Nr.	Teile-nr.	Beschreibung
171	171G0622	Bolt-stud
171a	171G0635	Bolt-stud
214	214B0414	Screw-pan+-
311	311B0600	Nut-hex
411	411B0600	Washer-plain
11009	11009-2036	Gasket
11009a	11009-2037	Gasket
11009b	11009-2187	Gasket
11009c	11009-2111	Gasket
15001	15001-2907	Carburetor-assy
16014	16014-2004	Screw-pilot Air
16020	16020-2052	Chamber-float
16025	16025-2130	Valve-throttle,#130
16030	16030-2016	Valve-float
16031	16031-2062	Float
16041	16041-2091	Shaft-carburetor,throttle
16041a	16041-2152	Shaft-carburetor,choke
16060	16060-2067	Pipe-intake
16073	16073-2060	Insulator
16126	16126-2117	Valve,choke
49121	49121-2123	Nozzle-main,#18b
92009	92009-2024	Screw
92009a	92009-2081	Screw
92009b	92009-2015	Screw
92033	92033-2067	Ring-snap
92043	92043-2006	Pin
92063	92063-2136	Jet-main,#77.5
92064	92064-2001	Jet-pilot,#40
92081	92081-2008	Spring
92081a	92081-2009	Spring
92150	92150-2098	Bolt

Copyright © 2003 Kawasaki Engine & Powerproducts. Alle Rechte vorbehalten.

PDFMAILER.DE
winload.de - Das ultimative Downloadarchiv für Free- & Shareware. Über 5000 Programme, da findet jeder das, was er braucht!

Katalogtitel
FA210D- S23

Block-Nr.
B-09

Blocktitel.
CONTROL-EQUIPMENT

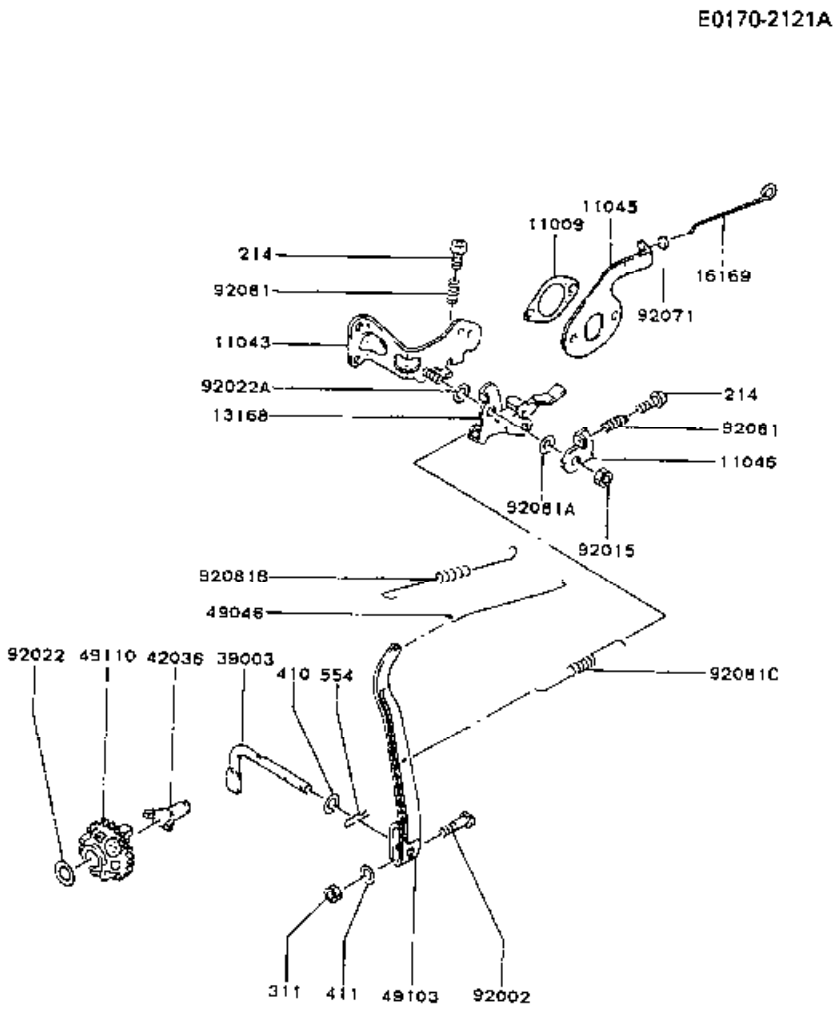

Ref.- Nr.	Teile-nr.	Beschreibung
214	214B0420	Screw-pan+-
311	311B0600	Nut-hex
410	410B0600	W-plain-s
411	411B0600	Washer-plain
554	554A0600	Pin-snap
11009	11009-2139	Gasket
11043	11043-2089	Bracket
11045	11045-2010	Bracket
11046	11046-2093	Bracket
13168	13168-2136	Lever,control
16169	16169-2052	Link-choke
39003	39003-2052	Arm-pivot
42036	42036-2051	Sleeve
49046	49046-2071	Rod-governor
49103	49103-2063	Arm-governor
49110	49110-2051	Governor-assy
92002	92002-2269	Bolt
92015	92015-2051	Nut
92022	92022-2019	Washer
92022a	92022-2103	Washer
92071	92071-2102	Grommet
92081	92081-2103	Spring
92081a	92081-2104	Spring
92081b	92081-2143	Spring
92081c	92081-2157	Spring

Copyright © 2003 Kawasaki Engine & Powerproducts. Alle Rechte vorbehalten.

PDFMAILER.DE
winload.de - Das ultimative Downloadarchiv für Free- & Shareware. Über 5000 Programme, da findet jeder das, was er braucht!

Katalogtitel
FA210D- S23

Block-Nr.
B-07

Blocktitel.
COOLING-EQUIPMENT

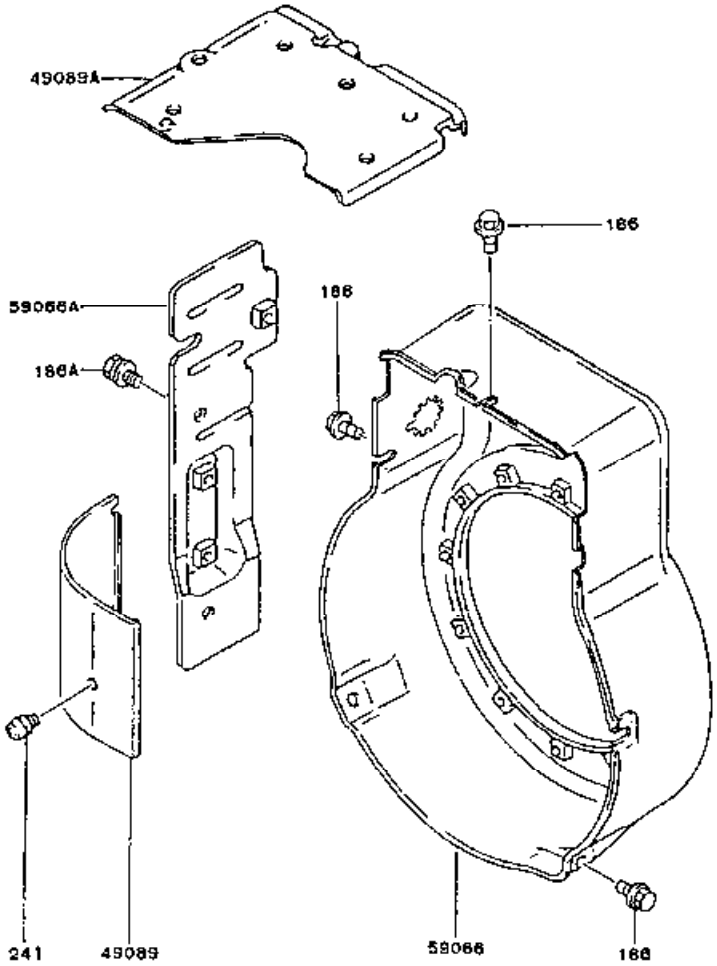

Ref.- Nr.	Teile-nr.	Beschreibung
186	186B0610	Bolt-upset-wp
186a	186B0612	Bolt-upset-wp
241	241B0510	Screw-pan-wp+-
49089	49089-2067	Shroud-engine
49089a	49089-2086	Shroud-engine
59066	59066-2099-9H	Housing-fan
59066a	59066-2288-9H	Housing-fan

Copyright © 2003 Kawasaki Engine & Powerproducts. Alle Rechte vorbehalten.

PDFMAILER.DE winload.de - Das ultimative Downloadarchiv für Free- & Shareware. Über 5000 Programme, da findet jeder das, was er braucht!

Katalogtitel
FA210D- S23

Block-Nr.
B-03

Blocktitel.
CYLINDER/CRANKCASE

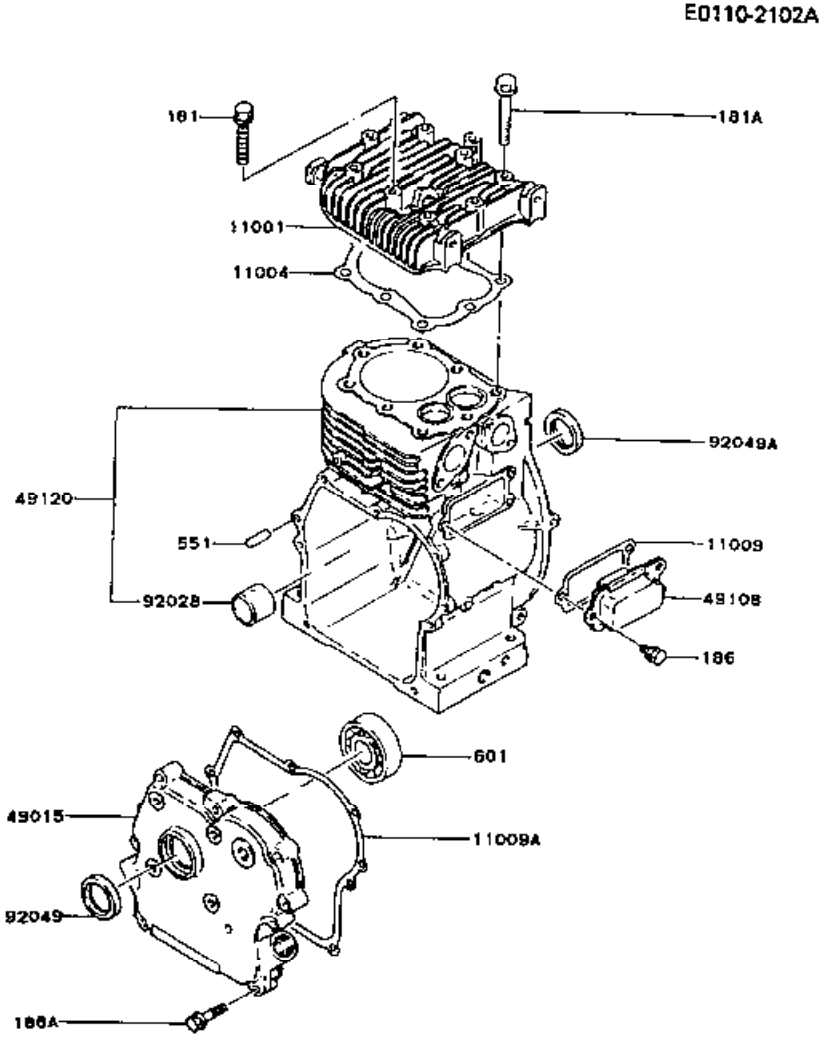

Ref.- Nr.	Teile-nr.	Beschreibung
181	181G0835	Bolt-upset-wp
181a	181G0855	Bolt-upset-wp
186	186B0612	Bolt-upset-wp
186a	186B0630	Bolt-upset-wp
551	551A0612	Pin-dowel
601	601A6205	Bearing-ball
11001	11001-2080	Head-cylinder
11004	11004-2067	Gasket-head
11009	11009-2140	Gasket
11009a	11009-2141	Gasket
49015	49015-6003	Cover-crankcase
49108	49108-2073	Cover-valve Chamber
49120	49120-6003	Crankcase-comp
92028	92028-2017	Bushing
92049	92049-2065	Seal-oil
92049a	92049-2051	Seal-oil

Copyright © 2003 Kawasaki Engine & Powerproducts. Alle Rechte vorbehalten.

PDFMAILER.DE
winload.de - Das ultimative Downloadarchiv für Free- & Shareware. Über 5000 Programme, da findet jeder das, was er braucht!

Katalogtitel
FA210D- S23

Block-Nr.
B-08

Blocktitel.
ELECTRIC-EQUIPMENT

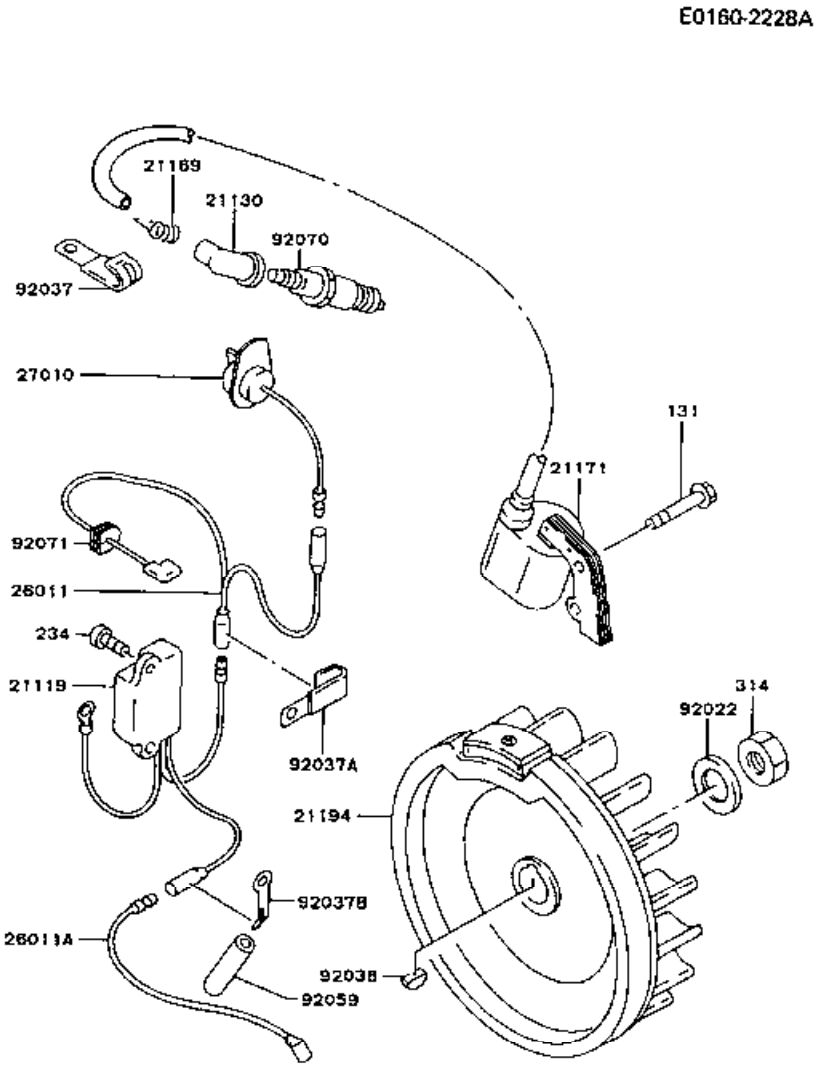

Ref.- Nr.	Teile-nr.	Beschreibung
131	131B0520	Bolt-flanged
234	234B0514	Screw-pan-wsp+-
314	314G1400	Nut-hex-fine
21119	21119-2103	Igniter
21130	21130-2051	Cap-spark Plug
21169	21169-2004	Terminal
21171	21171-2128	Coil-assy-ignition
21194	21194-2114	Flywheel-comp
26011	26011-2081	Wire-lead
26011a	26011-2130	Wire-lead
27010	27010-2052	Switch
92022	92022-2102	Washer
92037	92037-2098	Clamp
92037a	92037-2081	Clamp
92037b	92037-2165	Clamp
92038	92038-2077	Key
92059	92059-2156	Tube,5x6x35
92070	92070-2052	Plug-spark,bp4hs(ngk)
92071	92071-2113	Grommet

Copyright © 2003 Kawasaki Engine & Powerproducts. Alle Rechte vorbehalten.

PDFMAILER.DE winload.de - Das ultimative Downloadarchiv für Free- & Shareware. Über 5000 Programme, da findet jeder das, was er braucht!

Katalogtitel
FA210D- S23

Block-Nr.
B-12

Blocktitel.
FUEL-TANK/FUEL-VALVE

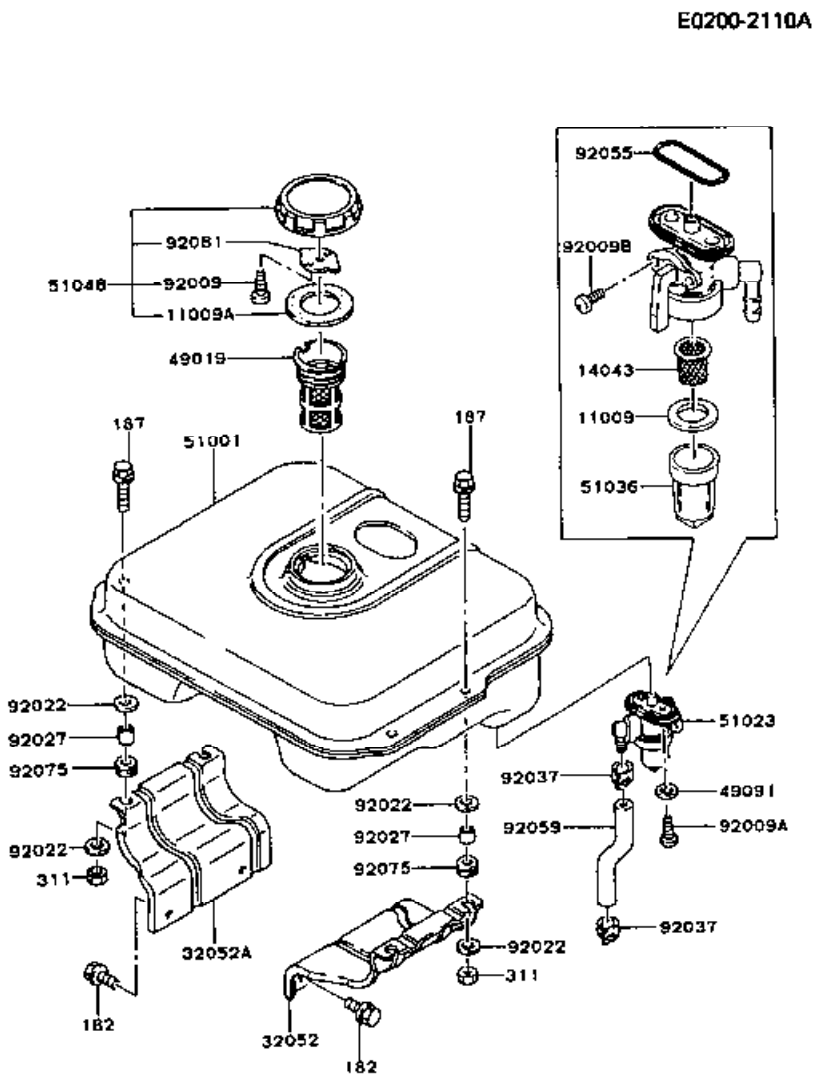

Ref.- Nr.	Teile-nr.	Beschreibung
182	182B0820	Bolt-upset-wsp
187	187B0625	Bolt-upset-wsp
311	311B0600	Nut-hex
11009	11060-2063	Gasket
11009a	11009-2115	Gasket
14043	14043-2052	Filter
32052	32052-2141-9H	Bracket-tank
32052a	32052-2142-9H	Bracket-tank
49019	49019-2051	Filter-fuel
49091	49091-2053	Washer-seal
51001	51001-2080-9H	Tank-comp-fuel
51023	51023-2096	Tap-assy
51036	51036-2062	Cup,fuel Tap
51048	51048-2055	Cap-assy-tank
92009	92009-2021	Screw
92009a	92009-2020	Screw
92009b	92009-1123	Screw
92022	92200-2035	Washer
92027	92027-2086	Collar
92037	92037-2052	Clamp
92055	92055-2069	Ring-o
92059	92059-2053	Tube
92075	92075-2095	Damper
92081	92081-2036	Spring

Copyright © 2003 Kawasaki Engine & Powerproducts. Alle Rechte vorbehalten.

PDFMAILER.DE
winload.de - Das ultimative Downloadarchiv für Free- & Shareware. Über 5000 Programme, da findet jeder das, was er braucht!

Katalogtitel
FA210D- S23

Block-Nr.
C-03

Blocktitel.
LABEL

F0290-2282A

Ref.- Nr.	Teile-nr.	Beschreibung
56030	56030-2251	Label
56031	56031-2307	Label-manual
56031a	56031-2308	Label-manual
56031b	56031-2349	Label-manual
56038	56038-2459	Label-brand
56040	56040-2188	Label-warning
56040a	56040-2189	Label-warning

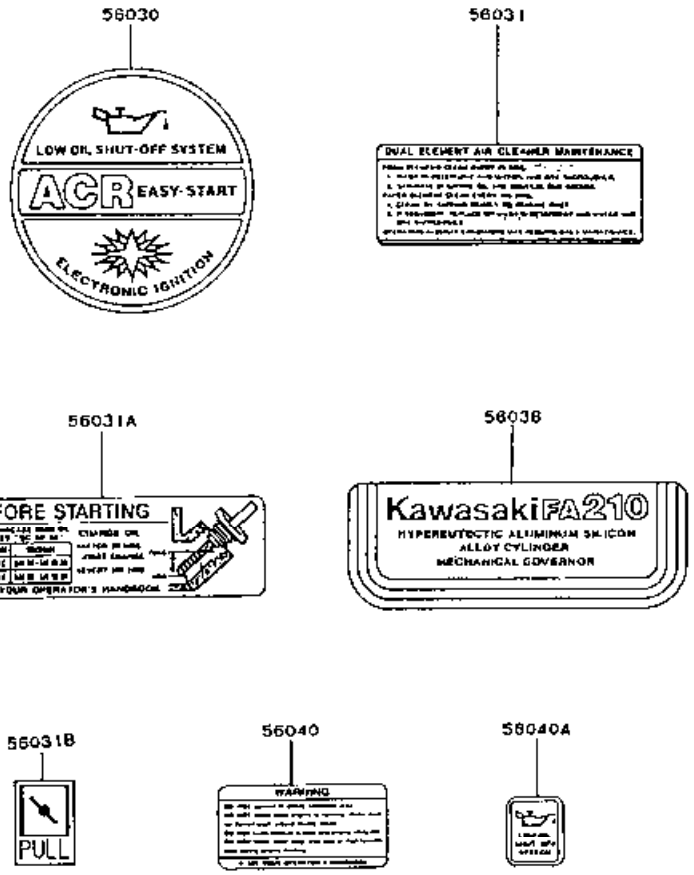

Copyright © 2003 Kawasaki Engine & Powerproducts. Alle Rechte vorbehalten.

PDFMAILER.DE winload.de - Das ultimative Downloadarchiv für Free- & Shareware. Über 5000 Programme, da findet jeder das, was er braucht!

Katalogtitel
FA210D- S23

Block-Nr.
B-06

Blocktitel.
LUBRICATION-EQUIPMENT

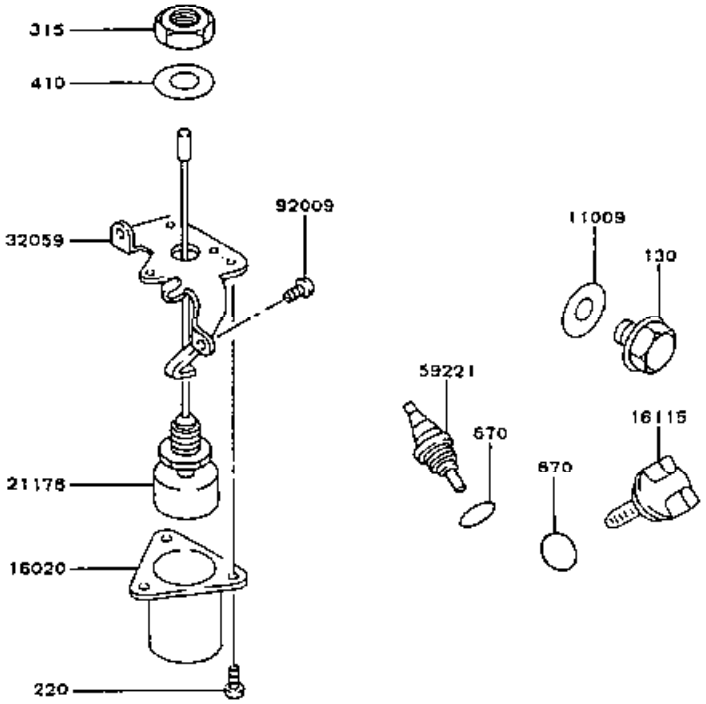

Ref.- Nr.	Teile-nr.	Beschreibung
130	130D1014	Bolt-flanged
220	220B0306	Screw-pan-cros
315	315B1200	Nut-hex-fine
410	410B1200	W-plain-s
670	670B2015	Ring-o
11009	11009-2432	Gasket
16020	16020-2074	Chamber-float
16115	16115-2069	Cap-oil Filler
21176	21176-2061	Sensor
32059	32059-2070	Bracket-switch
59221	59221-2123	Connector-cord
92009	92009-2104	Screw

Copyright © 2003 Kawasaki Engine & Powerproducts. Alle Rechte vorbehalten.

PDFMAILER.DE winload.de - Das ultimative Downloadarchiv für Free- & Shareware. Über 5000 Programme, da findet jeder das, was er braucht!

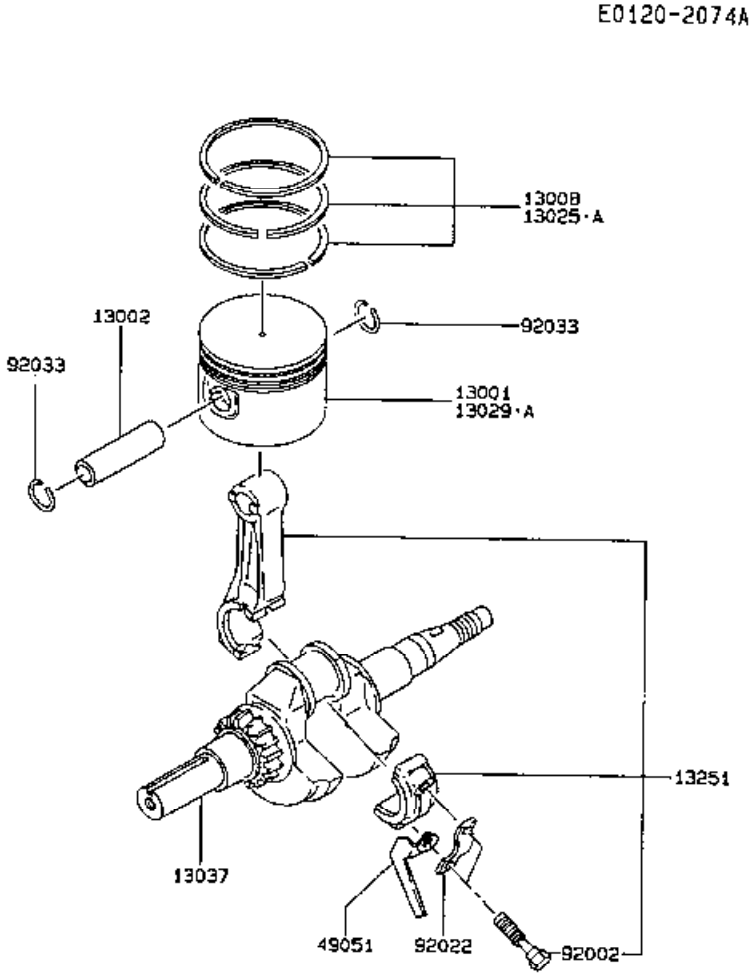

Ref.- Nr.	Teile-nr.	Beschreibung
13001	13001-2059	Piston-engine
13002	13002-2054	Pin-piston
13008	13008-6040	Ring-set-piston
13025	13025-2057	Ring-set-piston L,0.25
13025a	13025-2058	Ring-set-piston L,0.50
13029	13029-2061	Piston-engine L,0.25
13029a	13029-2062	Piston-engine L,0.50
13037	13037-2095	Crankshaft
13251	13251-6013	Rod-assy-connecting
49051	49051-2052	Splasher
92002	92002-2067	Bolt
92022	92022-2114	Washer
92033	92033-2052	Ring-snap

Copyright © 2003 Kawasaki Engine & Powerproducts. Alle Rechte vorbehalten.

PDFMAILER.DE
winload.de - Das ultimative Downloadarchiv für Free- & Shareware. Über 5000 Programme, da findet jeder das, was er braucht!

Katalogtitel
FA210D- S23

Block-Nr.
B-13

Blocktitel.
STARTER

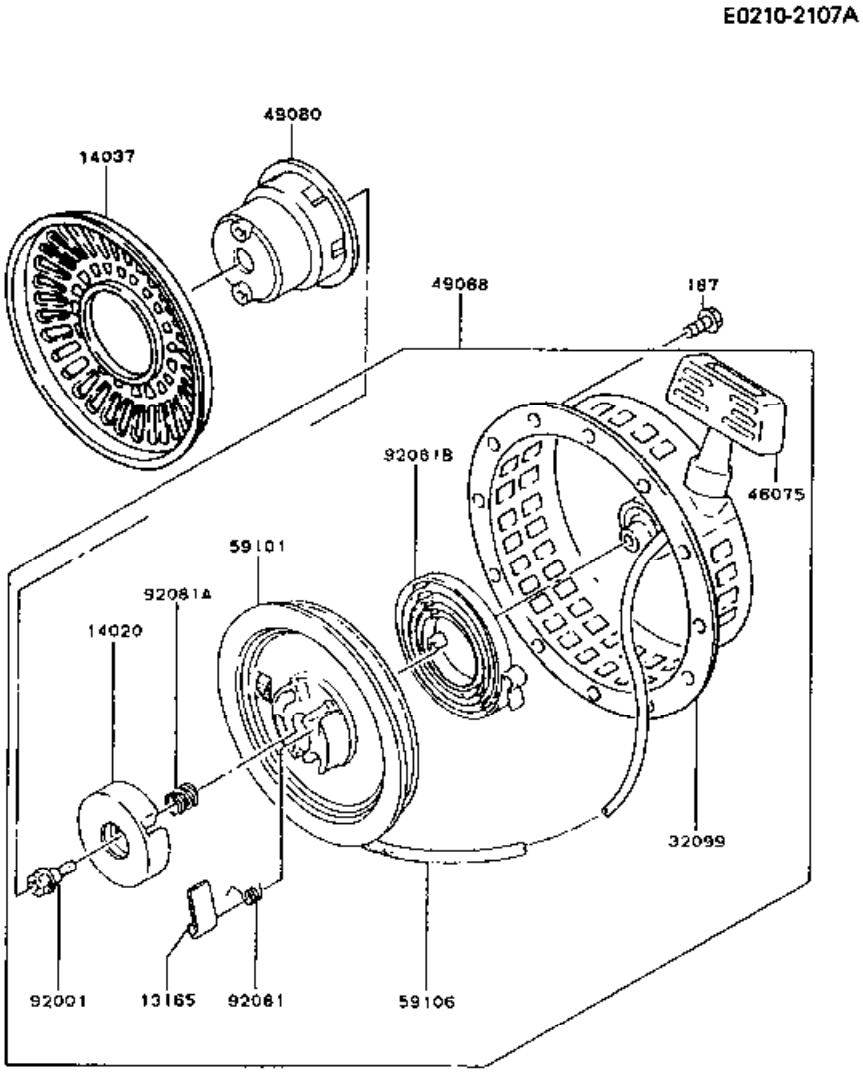

Ref.- Nr.	Teile-nr.	Beschreibung
187	187B0610	Bolt-upset-wsp
13165	13165-2003	Pawl
14020	14020-2003	Retainer
14037	14037-2052	Screen
32099	32099-2150-YK	Case,recoil Starter
46075	46075-2059	Grip,recoil Starter
49080	49080-2140	Pulley-starting
49088	49088-2320-YK	Starter-recoil
59101	59101-2076	Reel,recoil Starter
59106	59106-2099	Rope,4.5x1550
92001	92001-2027	Bolt
92081	92081-2021	Spring
92081a	92081-2022	Spring
92081b	92081-2023	Spring,recoil

Copyright © 2003 Kawasaki Engine & Powerproducts. Alle Rechte vorbehalten.

PDFMAILER.DE
winload.de - Das ultimative Downloadarchiv für Free- & Shareware. Über 5000 Programme, da findet jeder das, was er braucht!

Katalogtitel
FA210D- S23

Block-Nr.
B-05

Blocktitel.
VALVE/CAMSHAFT

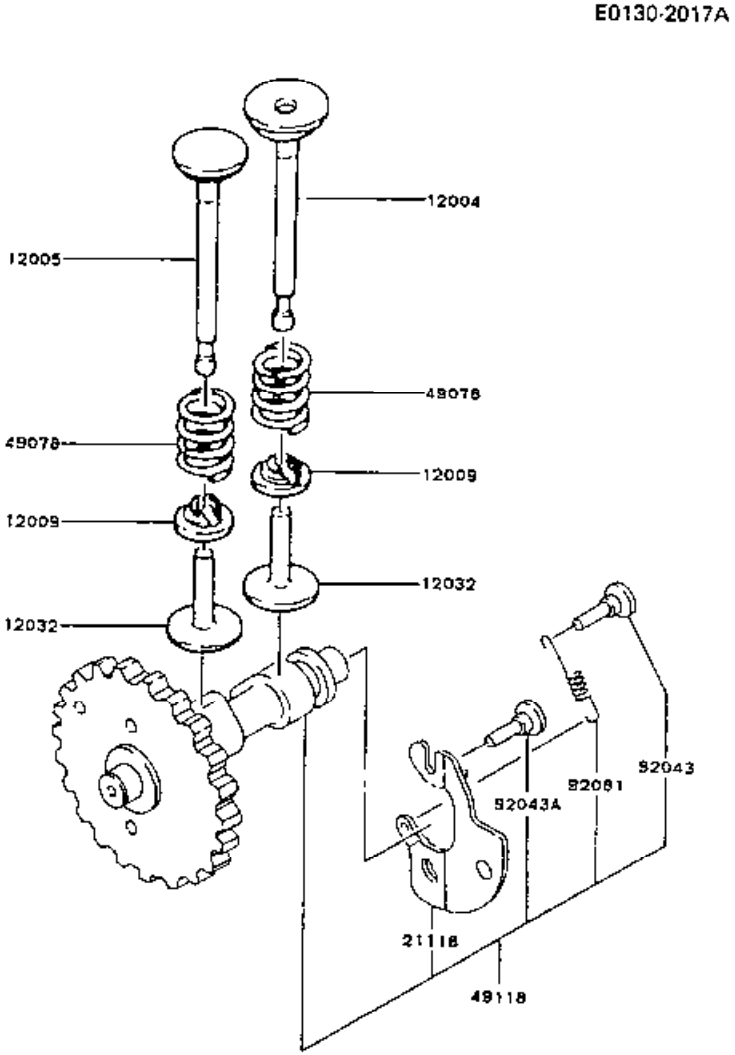

Ref.- Nr.	Teile-nr.	Beschreibung
12004	12004-2065	Valve-intake
12005	12005-2057	Valve-exhaust
12009	12009-2005	Retainer-valve Spring
12032	12032-2054	Tappet
21118	21118-2062	Decompressor
49078	49078-2051	Spring-engine Valve
49118	49118-2059	Camshaft-comp
92043	92043-2123	Pin
92043a	92043-2126	Pin
92081	92081-2342	Spring

Copyright © 2003 Kawasaki Engine & Powerproducts. Alle Rechte vorbehalten.