Jonsered

SERVICE

7

I0300043

IPL, LM 2146 CD, 2003-01, 106 30 41-61

LM 2146 CD

Spare parts
Ersatzteile
Pièces détachées
Reserve onderdelen
Repuestos
Reservdelar

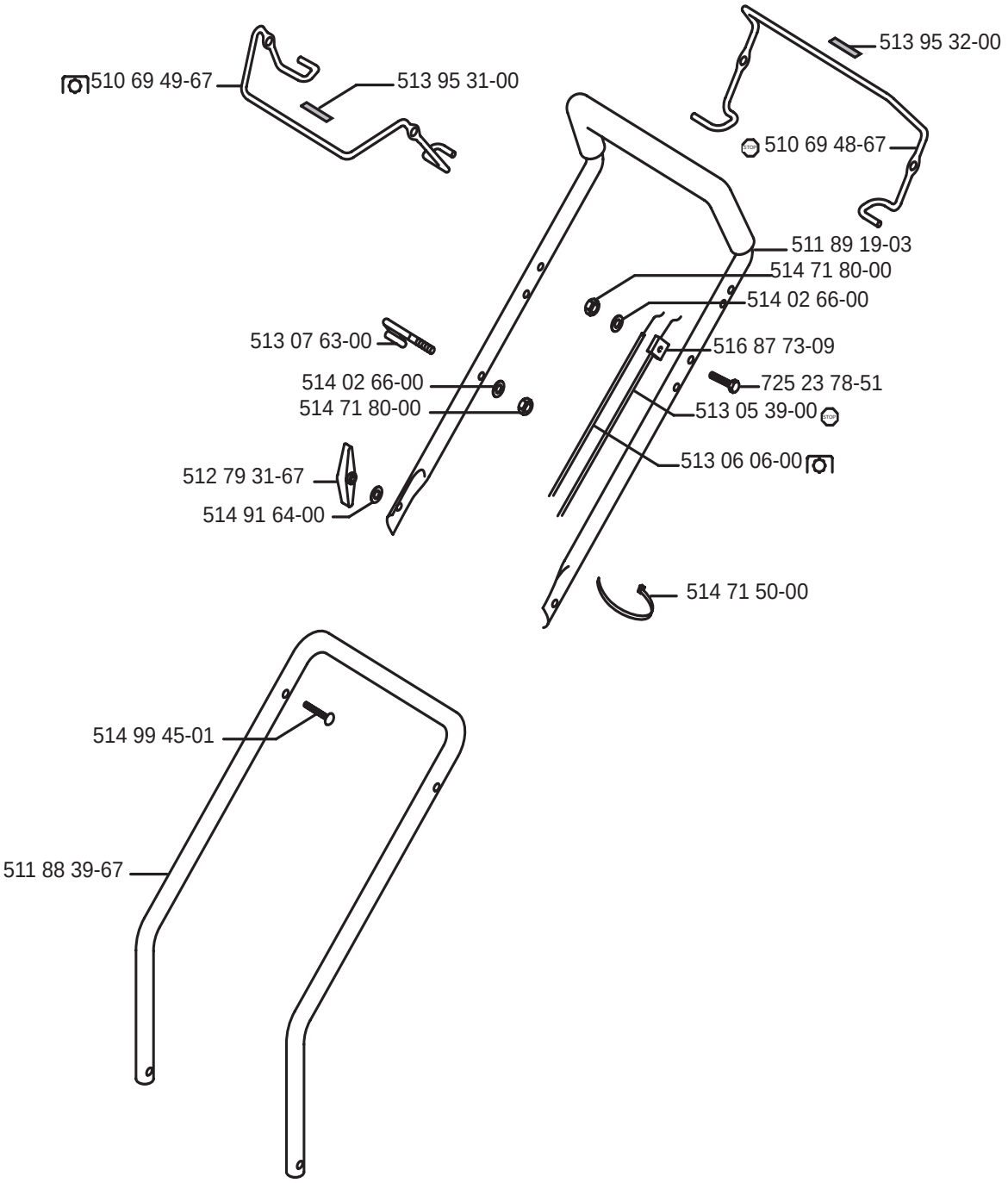
510 69 49-67
513 95 31-00
513 95 32-00
510 69 48-67
511 89 19-03
514 71 80-00
514 02 66-00
513 07 63-00
516 87 73-09
514 02 66-00
725 23 78-51
514 71 80-00
513 05 39-00
513 06 06-00
512 79 31-67
514 91 64-00
514 71 50-00
514 99 45-01
511 88 39-67

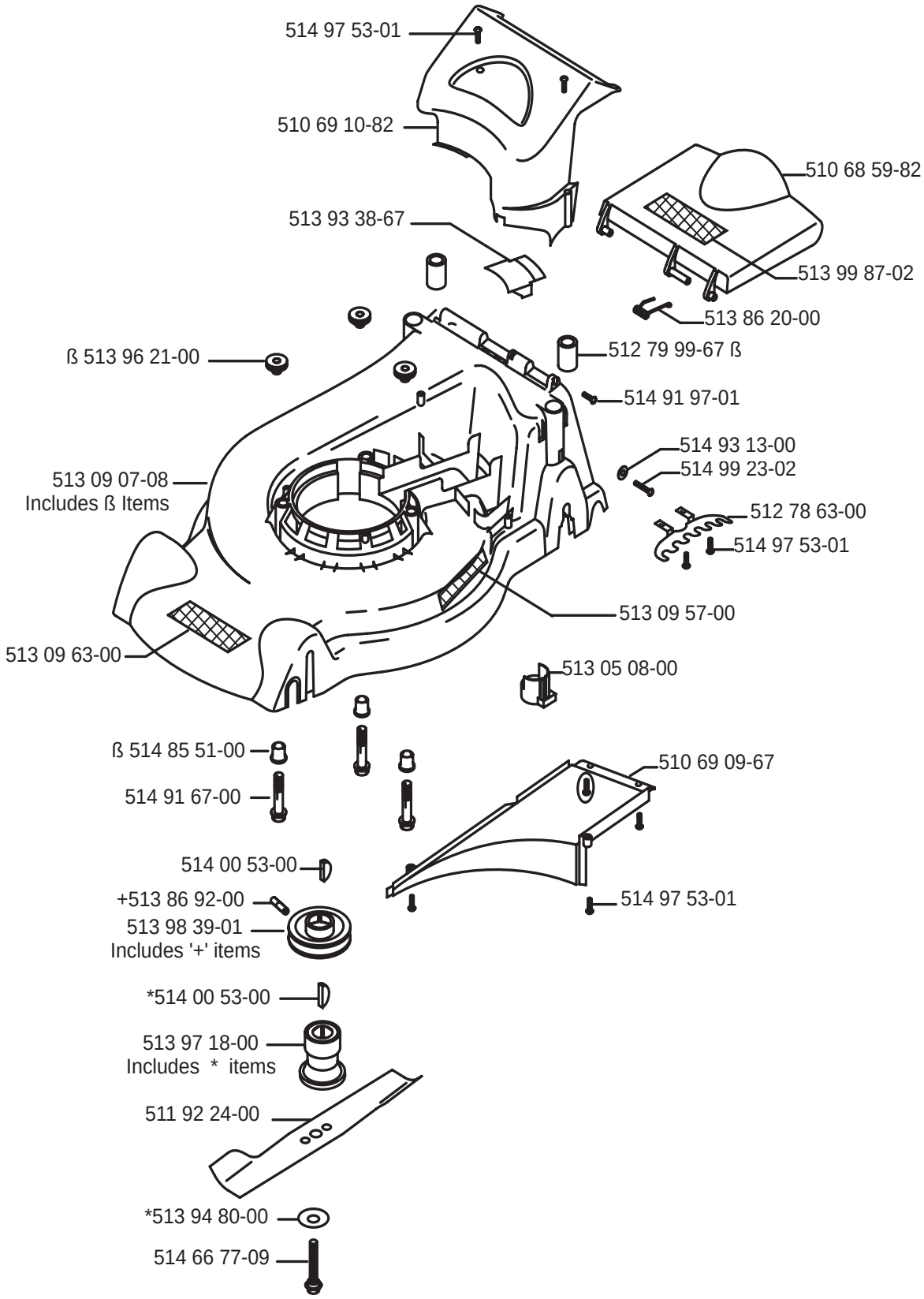
514 97 53-01
510 69 10-82
510 68 59-82
513 93 38-67
513 99 87-02
513 86 20-00
ß 513 96 21-00
512 79 99-67 ß
514 91 97-01
514 93 13-00
514 99 23-02
513 09 07-08
Includes ß Items
512 78 63-00
514 97 53-01
513 09 57-00
513 09 63-00
513 05 08-00
ß 514 85 51-00
510 69 09-67
514 91 67-00
514 00 53-00
+513 86 92-00
514 97 53-01
513 98 39-01
Includes '+' items
*514 00 53-00
513 97 18-00
Includes * items
511 92 24-00
*513 94 80-00
514 66 77-09

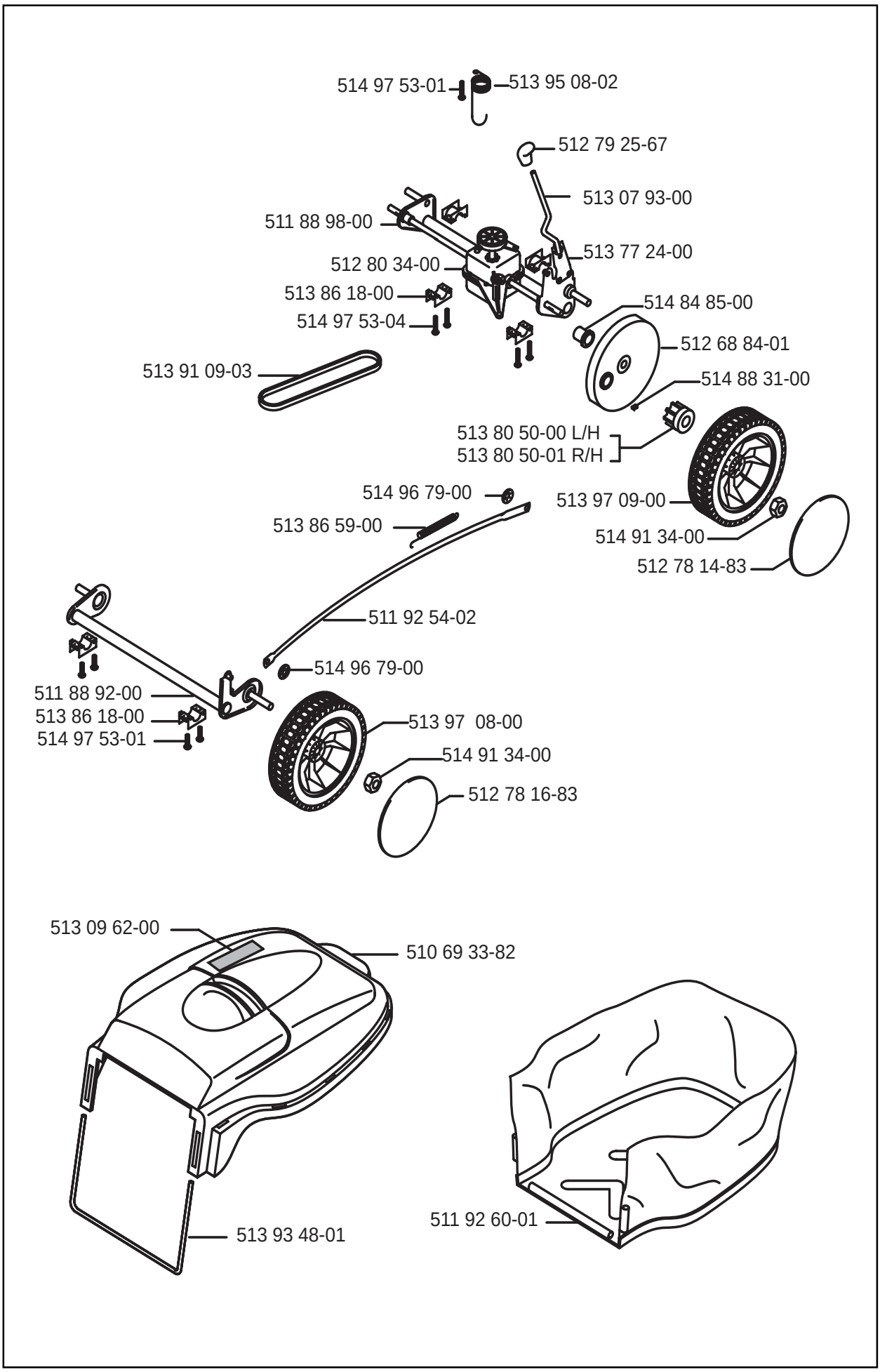
514 97 53-01
513 95 08-02
512 79 25-67
513 07 93-00
511 88 98-00
513 77 24-00
512 80 34-00
513 86 18-00
514 84 85-00
514 97 53-04
512 68 84-01
513 91 09-03
514 88 31-00
513 80 50-00 L/H
513 80 50-01 R/H
514 96 79-00
513 97 09-00
513 86 59-00
514 91 34-00
512 78 14-83
511 92 54-02
514 96 79-00
511 88 92-00
513 86 18-00
514 97 53-01
513 97 08-00
514 91 34-00
512 78 16-83
513 09 62-00
510 69 33-82
511 92 60-01
513 93 48-01