Jonsered

SERVICE

7

I0200047

IPL, 580 RD BBC, 2002-04, 106 28 89-61

580 RD BBC

Spare parts
Ersatzteile
Pièces détachées
Reserve onderdelen
Repuestos
Reservdelar

106 28 89-61

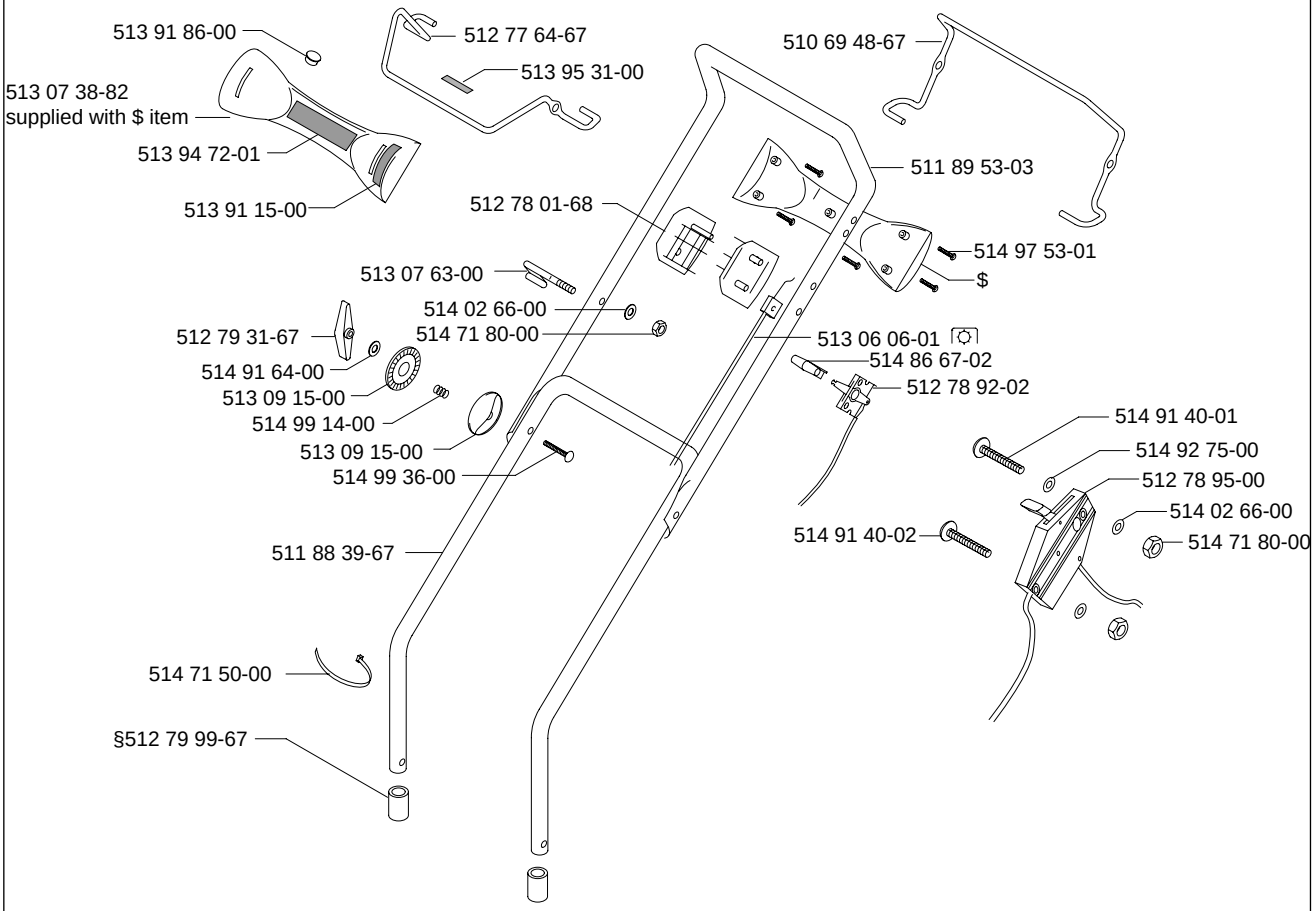
513 91 86-00
512 77 64-67
513 95 31-00
510 69 48-67
513 07 38-82
supplied with $ item
513 94 72-01
513 91 15-00
511 89 53-03
512 78 01-68
514 97 53-01
$
513 07 63-00
514 02 66-00
512 79 31-67
514 71 80-00
513 06 06-01
514 91 64-00
514 86 67-02
513 09 15-00
512 78 92-02
514 99 14-00
514 91 40-01
513 09 15-00
514 92 75-00
514 99 36-00
512 78 95-00
514 02 66-00
514 91 40-02
514 71 80-00
511 88 39-67
514 71 50-00
§512 79 99-67

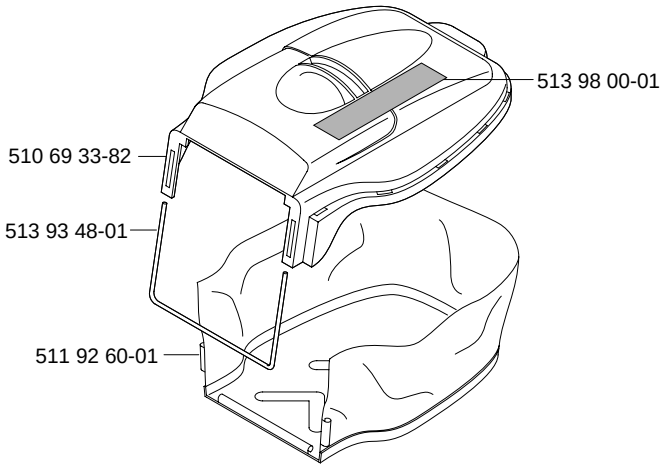
513 98 00-01
510 69 33-82
513 93 48-01
511 92 60-01

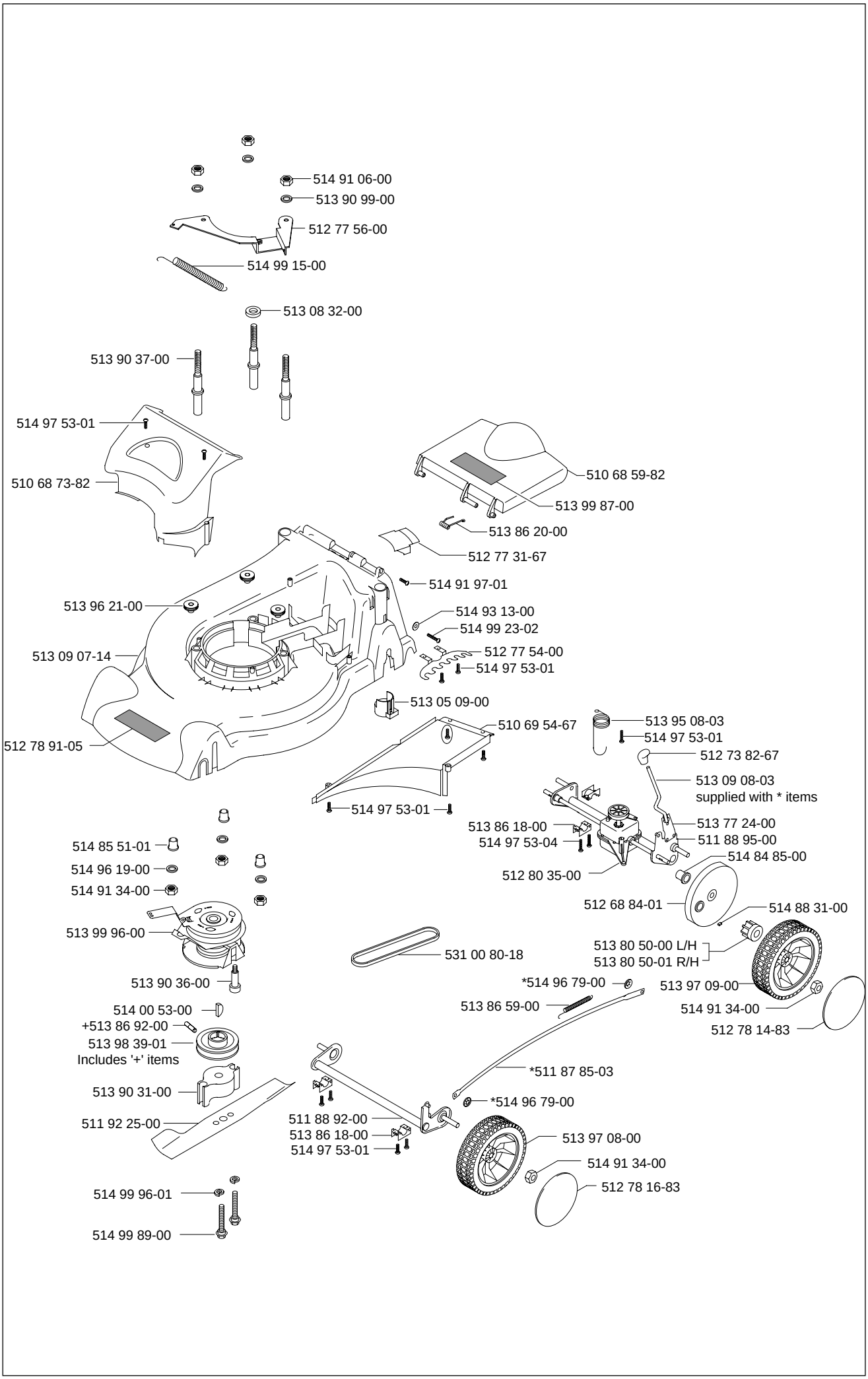
514 91 06-00
513 90 99-00
512 77 56-00
514 99 15-00
513 08 32-00
513 90 37-00
514 97 53-01
510 68 73-82
510 68 59-82
513 99 87-00
513 86 20-00
512 77 31-67
514 91 97-01
513 96 21-00
514 93 13-00
514 99 23-02
513 09 07-14
512 77 54-00
514 97 53-01
513 05 09-00
510 69 54-67
513 95 08-03
514 97 53-01
512 78 91-05
512 73 82-67
513 09 08-03
supplied with * items
514 97 53-01
513 86 18-00
513 77 24-00
514 97 53-04
511 88 95-00
514 85 51-01
514 84 85-00
514 96 19-00
512 80 35-00
514 91 34-00
512 68 84-01
514 88 31-00
513 99 96-00
513 80 50-00 L/H
513 80 50-01 R/H
531 00 80-18
513 90 36-00
*514 96 79-00
513 97 09-00
514 00 53-00
513 86 59-00
514 91 34-00
+513 86 92-00
512 78 14-83
513 98 39-01
Includes '+' items
*511 87 85-03
513 90 31-00
*514 96 79-00
511 92 25-00
511 88 92-00
513 86 18-00
514 97 53-01
513 97 08-00
514 91 34-00
512 78 16-83
514 99 96-01
514 99 89-00