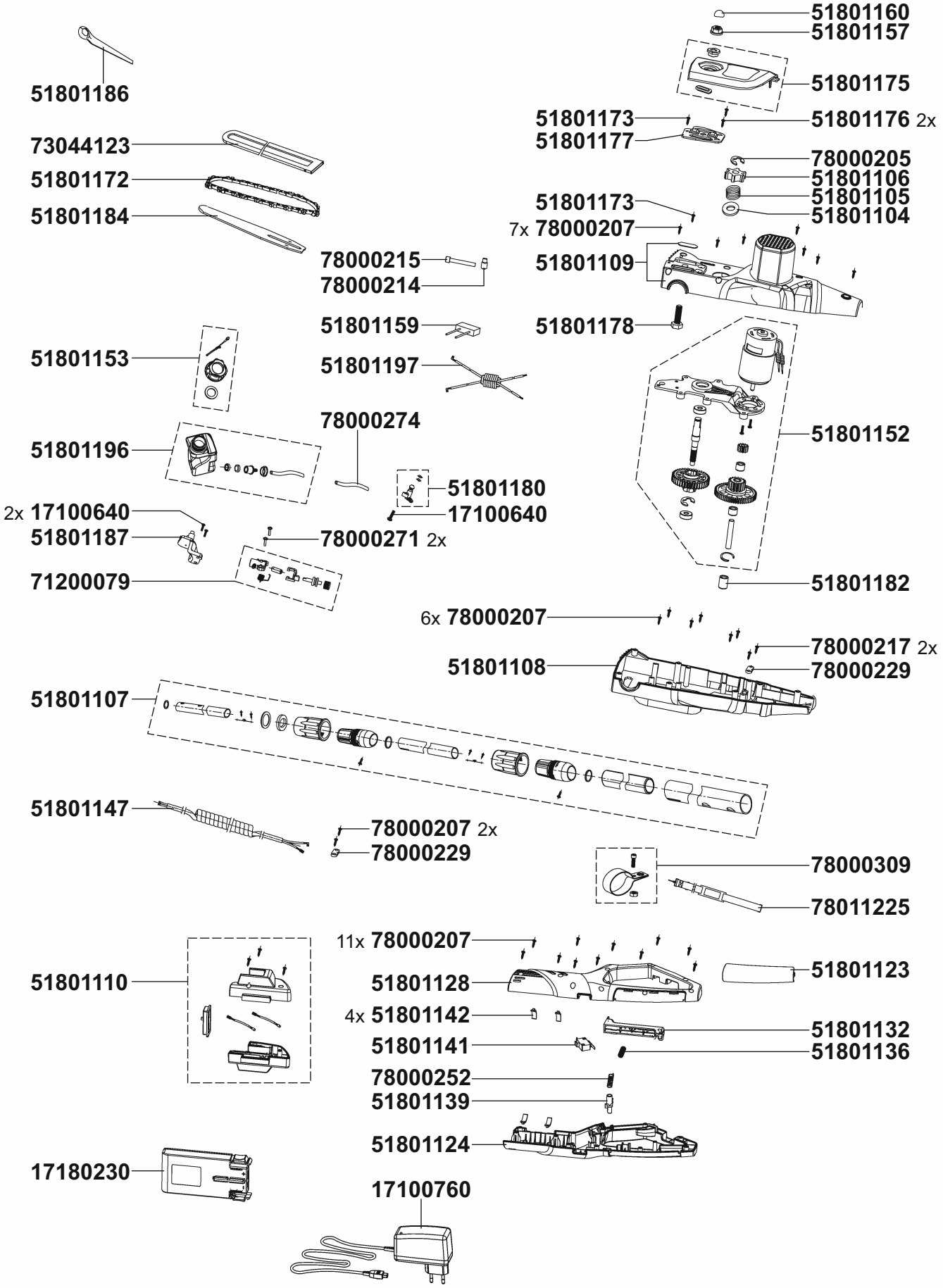TAS 2012 OKAY